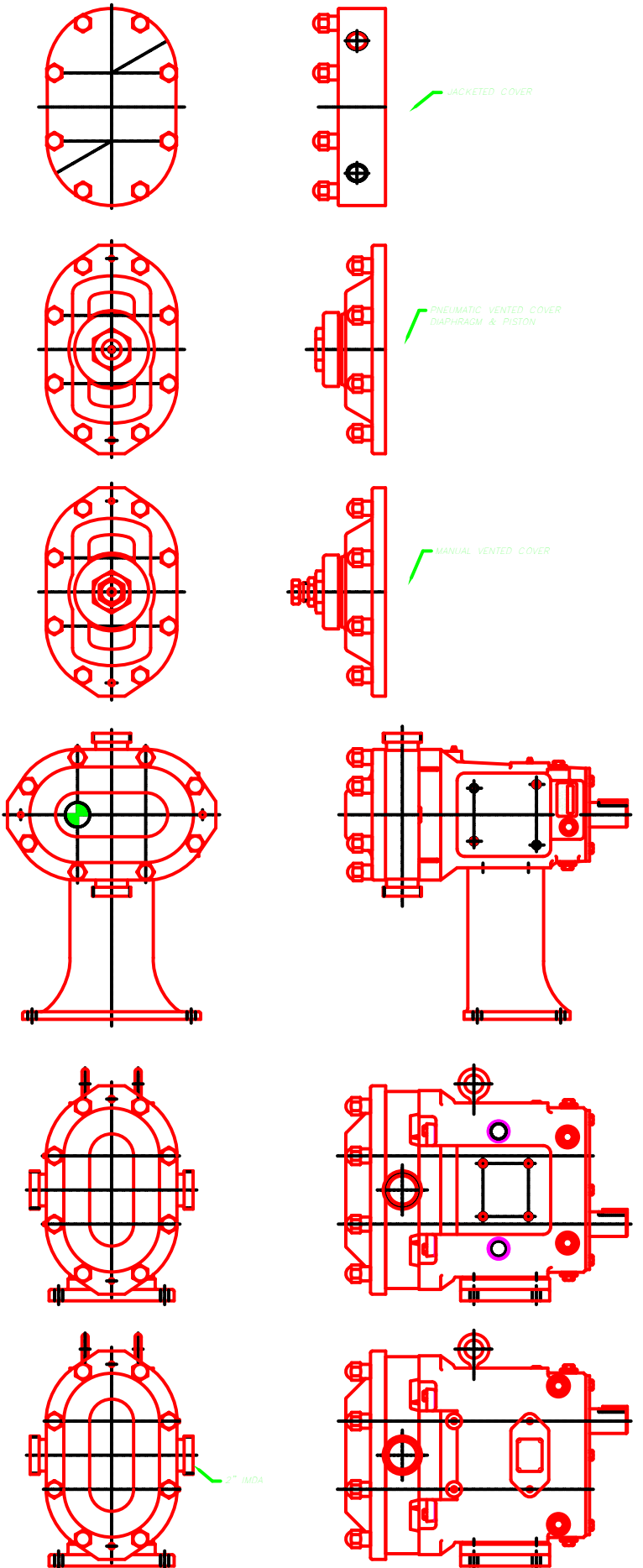MODEL 045 UNIVERSAL II PUMP