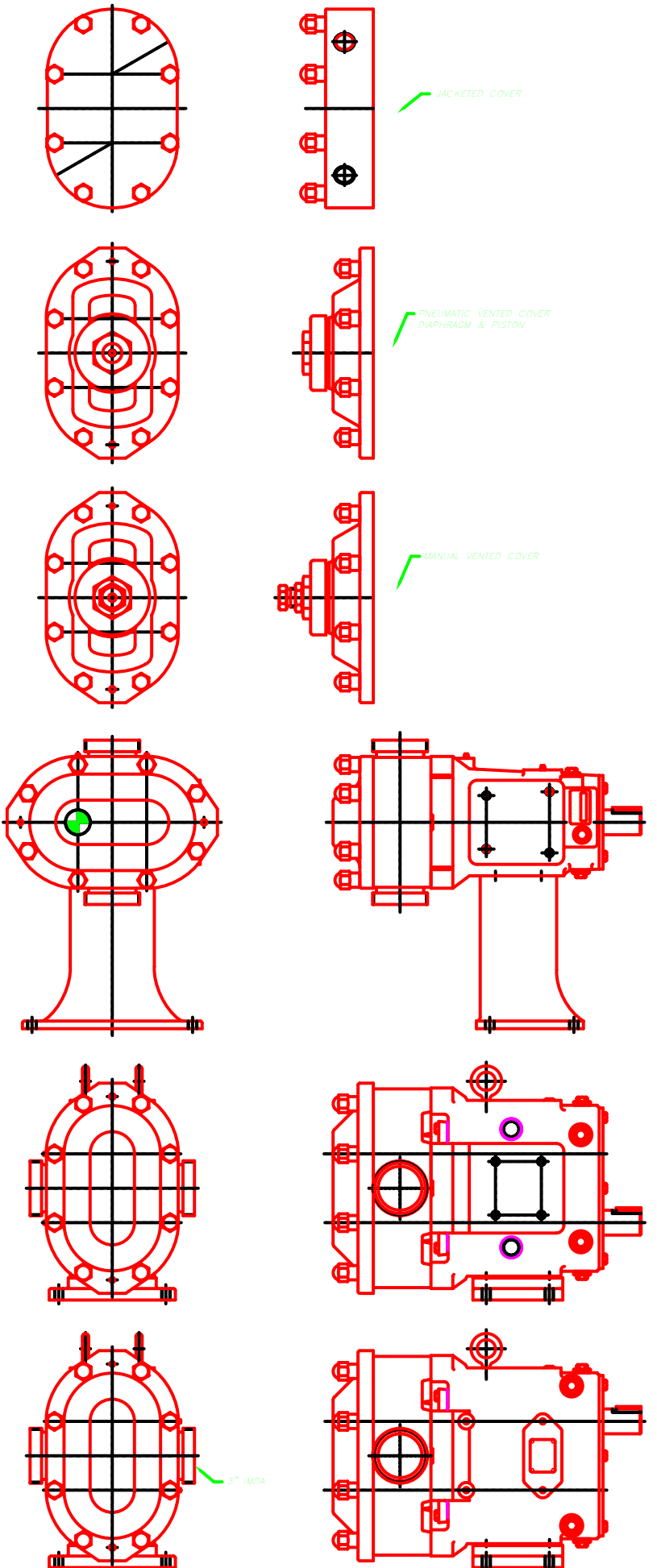MODEL 130 UNIVERSAL II PUMP