Johnson Pump®

INSTRUCTION MANUAL

TopGear GM

Internal Gear Pumps

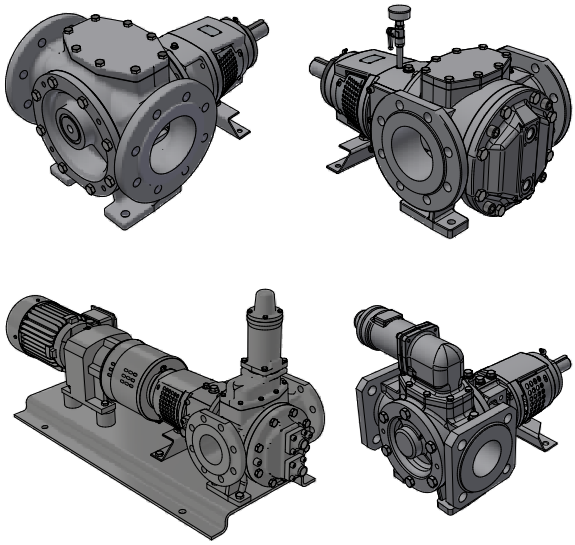

CE EAC UKCA

DOCUMENT: A.0500.401 - IM-TG GM / 07.05 EN

ISSUED: 06/2023

SPXFLOW®

READ AND UNDERSTAND THIS MANUAL PRIOR TO OPERATING OR SERVICING THIS PRODUCT.

EC Declaration of Conformity

(Directive 2006/42/EC, appendix II-A)

Manufacturer

SPX FLOW Europe Limited - Belgium
Evenbroekveld 2-6
9420 Erpe-Mere
Belgium

hereby declares that all pumps member of product-families, TopGear GS-range, GP-range, GM-range, H-range, MAG-range, BLOC-range, L-range, RBS4, SRT 150/200 whether delivered without drive, or delivered as an assembly with drive, are in conformity with the provisions of Directive 2006/42/EC (as altered most recently) and where applicable the following directives and standards:

- EC directive 2014/35/EU, "Electric equipment for use within certain voltage limits"
- EC directive 2014/30/EU, “Electromagnetic Compatibility”
- EC directive 2011/65/EU, “Restriction of the Use of Certain Hazardous Substances in Electrical and Electronic Equipment”
- standards EN-ISO 12100, EN 809
- standard EN 60204-1 if applicable

The pumps to which this declaration refers may only be put into operation after they have been installed in the way prescribed by the manufacturer, and, as the case may be, after the complete system of which these pumps form part, has been made to fulfil all applicable essential Health & Safety requirements.

EC Declaration of Incorporation

(Directive 2006/42/EC, appendix II-B)

Manufacturer

SPX FLOW Europe Limited - Belgium
Evenbroekveld 2-6
9420 Erpe-Mere
Belgium

hereby declares that the partly completed pump (Back-Pull-Out unit), member of product-families TopGear GS-range, GP-range, GM-range, H-range, MAG-range, BLOC-range, SRT 150/200, is in conformity with the provisions of Directive 2006/42/EC as well as with the following standards:

- EN-ISO 12100, EN 809

and that this partly completed pump is meant to be incorporated into the specified pump and may only be put into use after the complete machine of which the pump under consideration forms part has been made and declared to comply with all Directives.

These declarations are issued under the sole responsibility of the manufacturer.

Erpe-Mere, July 1st, 2023

F. Vander Beken,
Branch Manager

Contents

1.0 Introduction 7
1.1 General 7
1.2 Reception, handling and storage 7
1.2.1 Reception 7
1.2.2 Handling 7
1.2.3 Storage 7
1.3 Safety 8
1.3.1 General 8
1.3.2 Pump units 9
1.3.2.1 Pump unit handling 9
1.3.2.2 Installation 9
1.3.2.3 Before commissioning the pump unit 10
1.3.2.4 Disassembly/assembly of the coupling guard 10
1.3.2.5 Name plate – Declaration of Conformity 10
1.4 Technical conventions 11
2.0 Pump description 12
2.1 Type designation 12
3.0 General technical information 16
3.1 Pump standard parts 16
3.2 Operating principle 16
3.2.1 Self-priming operation 17
3.2.2 Safety relief valve – Working principle 17
3.3 Sound 17
3.4 General performance 17
3.5 Main characteristics 18
3.6 Pressure 19
3.7 Sound level 19
3.7.1 Sound level of a pump without drive 19
3.7.2 The sound level of the pump unit 20
3.7.3 Influences 20
3.8 Material options 20
3.9 Jacket options 21
3.10 Electrical heating 21
3.11 Internals 22
3.11.1 Bush materials 22
3.11.2 Maximum temperature of internals 22
3.11.3 Operation under hydrodynamic lubrication conditions 23
3.11.4 Maximum torque of pump shaft and rotor material combination 23
3.12 Mass moment of inertia 23
3.13 Axial and radial clearances 23
3.14 Extra clearances 24
3.15 Play between gear teeth 25
3.16 Maximum size of solid particles 25
3.17 Shaft sealings 25
3.17.1 Packed gland 25
3.17.2 Packing ring materials 25
3.17.3 Mechanical seals 26
3.17.3.1 Mechanical seals according to EN12756 (DIN24960) – General information 26

3.17.3.2 Cartridge mechanical seals 27
3.17.4 Reverted packing execution for e.g. chocolate application 28
3.17.5 Triple PTFE lip-seal cartridge 29
3.18 Safety relief valve 30
3.18.1 Pressure 31
3.18.2 Heating 31
3.18.3 Safety relief valve – Relative adjustment 32
3.18.4 Sectional drawings and part lists 33
3.18.4.1 Single safety relief valve 33
3.18.4.2 Heated spring casing 34
3.18.4.3 Double safety relief valve 34
3.19 Installation 35
3.19.1 General 35
3.19.2 Location 35
3.19.2.1 Short suction line 35
3.19.2.2 Accessibility 35
3.19.2.3 Outdoor installation 35
3.19.2.4 Indoor installation 36
3.19.2.5 Stability 36
3.19.3 Drives 36
3.19.3.1 Starting torque 36
3.19.3.2 Radial load on shaft end 37
3.19.4 Shaft rotation for pump without safety relief valve 37
3.19.5 Shaft rotation for pump with safety relief valve 38
3.19.6 Suction and discharge pipes 39
3.19.6.1 Forces and moments 39
3.19.6.2 Piping 39
3.19.6.3 Isolating valves 40
3.19.6.4 Strainer 40
3.19.7 Secondary piping 40
3.19.7.1 Drain lines 40
3.19.7.2 Heating jackets 41
3.19.8 Flush/quench media 42
3.19.8.1 Packing 42
3.19.8.2 Single Mechanical seal 43
3.19.8.3 Double mechanical seal – Tandem arrangement 43
3.19.8.5 Cartridge mechanical seal 44
3.19.8.4 Double mechanical seal – Back-to-back arrangement 44
3.19.8.6 Secondary connections 45
3.19.9 Guidelines for assembly 48
3.19.9.1 Transport of pump unit 48
3.19.9.2 Foundation pump unit 48
3.19.9.3 Variators, Gear box, Gear motors, Motors 48
3.19.9.4 Electric motor drive 48
3.19.9.5 Combustion engines 49
3.19.9.6 Shaft coupling 49
3.19.9.7 Guarding of moving parts 50
3.19.9.8 Electrical heating 50
3.20 Instructions for start-up 51
3.20.1 General 51
3.20.2 Cleaning the pump 51
3.20.2.1 Cleaning suction line 51
3.20.3 Venting and filling 51
3.20.4 Checklist – Initial start-up 52
3.20.5 Start-up 53
3.20.6 Shut-down 53
3.20.7 Abnormal operation 53
3.21 Trouble shooting 54
3.21.1 Instructions for re-using and disposal 56
3.21.1.1 Re-use 56
3.21.1.2 Disposal 56

3.22 Maintenance instructions 57
3.22.1 General 57
3.22.2 Preparation 57
3.22.2.1 Surroundings (on site) 57
3.22.2.2 Tools 57
3.22.2.3 Shut-down 57
3.22.2.4 Motor safety 57
3.22.2.5 Conservation 57
3.22.2.6 External cleaning 58
3.22.2.7 Electrical installation 58
3.22.2.8 Draining of fluid 58
3.22.2.9 Fluid circuits 59
3.22.2.10 Electrical heating 59
3.22.3 Specific components 59
3.22.3.1 Nuts and bolts 59
3.22.3.2 Plastic or rubber components 59
3.22.3.3 Flat gaskets 59
3.22.3.4 Filter or suction strainer 59
3.22.3.5 Anti-friction bearings 60
3.22.3.6 Sleeve bearings 61
3.22.3.7 Shaft seals 62
3.22.4 Front pull-out 64
3.22.5 Back pull-out 64
3.22.6 Clearance adjustment 64
3.22.7 Designation of threaded connections. 65
3.22.7.1 Threaded connection Rp (example Rp 1/2) 65
3.22.7.2 Threaded connection G (example G 1/2) 65

4.0 Instructions for assembly and disassembly 66
4.1 General 66
4.2 Tools 66
4.3 Preparation 66
4.4 After disassembly 66
4.5 Anti-friction bearings 67
4.5.1 General 67
4.5.2 TG GM2-25 and TG GM3-32 disassembly 67
4.5.3 TG GM2-25 and TG GM3-32 assembly 67
4.5.4 TG GM6-40 to TG GM360-150 disassembly 68
4.5.5 TG GM6-40 to TG GM360-150 assembly 68
4.6 Relief valve 69
4.6.1 Disassembly 69
4.6.2 Assembly 69
4.7 Electrical heating 70
4.7.1 General 70
4.7.2 Electrical heating on the pump cover (in the idler pin) 70
4.7.2.1 Disassembly 70
4.7.2.2 Assembly 70
4.7.3 Electrical heating around shaft seal (in the intermediate casing) 71
4.7.3.1 Disassembly 71
4.7.3.2 Assembly 71
4.8 Mechanical seal 72
4.8.1 General 72
4.8.2 Preparation 72
4.8.3 Special tools 72
4.8.4 General instructions during assembly 73
4.8.5 Assembly of the stationary seat 73
4.8.6 Assembly of the rotating part 73
4.8.7 Adjustment of mechanical seal 74
4.8.7.1 GS – Single mechanical seal 74
4.8.7.2 GG – Double mechanical seal tandem 78

4.8.7.3 GD – Double mechanical seal “Back-to-back” 78
4.8.7.4 GC – Mechanical seal cartridge 80
4.9 Coupling guard 83
5.0 Sectional drawings and part lists 86
5.1 TG GM2-25 and TG GM3-32 86
5.1.1 Hydraulic part 87
5.1.2 Bearing bracket 87
5.1.3 Flange connection options 87
5.1.4 S-jacket options 88
5.1.4.1 S-jacket on pump cover 88
5.1.4.2 S-jacket around shaft seal 88
5.1.5 Seal options 88
5.1.5.1 Packing rings – PQ 88
5.1.5.2 Single mechanical seal – GS 89
5.1.5.3 Double mechanical seal tandem – GG 89
5.1.5.4 Double mechanical seal back-to-back – GD 89
5.2 TG GM6-40 to TG GM360-150 90
5.2.1 Hydraulic part 91
5.2.2 Bearing bracket 91
5.2.3 Flange connection options 92
5.2.4 Jacket options and electrical heating 93
5.2.4.1 S-jacket on pump cover 93
5.2.4.2 S-jacket around shaft seal 93
5.2.4.3 T-jackets with flange connections on pump cover 94
5.2.4.4 T-jackets with flange connections around shaft seal 95
5.2.4.5 Electrical heating on the pump cover (in the idler pin) 96
5.2.4.6 Electrical heating around shaft seal (in the intermediate casing) 97
5.2.5 Shaft seal options 98
5.2.5.1 Packing rings PQ with lantern ring 98
5.2.5.2 Packing rings PO without lantern ring 98
5.2.5.3 Single mechanical seal – GS 98
5.2.5.4 Cartridge mechanical seal – GC 99
5.2.5.5 Double mechanical seal tandem – GG 99
5.2.5.6 Double mechanical seal back-to-back – GD 99
5.2.5.7 Cartridge triple lip-seal - LCT TV (LCT XX) 100
5.2.5.8 Reverted packing – Chocolate version 101
6.0 Dimensional drawings 102
6.1 Standard pump 102
6.1.1 TG GM2-25 to TG GM6-40 102
6.1.2 TG GM15-50 to TG GM360-150 103
6.2 Flange connections 104
6.2.1 TG GM2-25 to TG GM6-40 104
6.2.2 TG GM15-50 to TG GM360-150 104
6.3 Jackets – Electrical heating 105
6.3.1 TG GM2-25 to TG GM6-40 105
6.3.2 TG GM15-50 to TG GM360-150 106
6.3.3 Electrical heating 107
6.4 Safety relief valves 108
6.4.1 Single safety relief valve 108
6.4.2 Double safety relief valve 108
6.4.3 Heated safety relief valve (S-jacket) 109
6.4.4 Heated safety relief valve (T-jacket) 110
6.4.5 Heated double safety relief valve (S-jacket) 111
6.4.6 Heated double safety relief valve (T-jacket) 112
6.5 Bracket support 113
6.6 Weights – Mass 113

1.0 Introduction

1.1 General

This instruction manual contains necessary information on the TopGear pumps and must be read carefully before installation, service and maintenance. The manual must be kept easily accessible to the operator.

Important!
The pump must not be used for other purposes than recommended and quoted for without consulting your local supplier.

Liquids not suitable for the pump can cause damages to the pump unit, with a risk of personal injury.

1.2 Reception, handling and storage

1.2.1 Reception

Remove all packing materials immediately after delivery. Check the consignment for damage immediately on arrival and make sure that the name plate/type designation is in accordance with the packing slip and your order.

In case of damage and/or missing parts, a report should be drawn up and presented to the carrier at once. Notify your local supplier.

All pumps have the serial number stamped on a name plate.
This number should be stated in all correspondence with your local supplier.
The first digits of the serial number indicate the year of production.

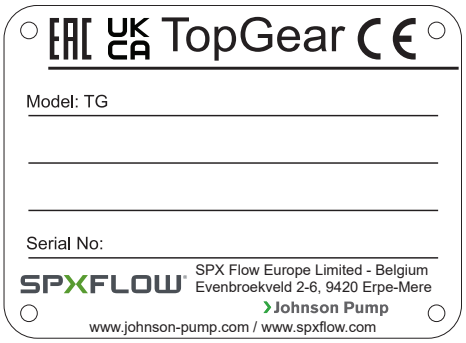

1.2.2 Handling

Check the mass (weight) of the pump unit. All parts weighing more than 20 kg must be lifted using lifting slings and suitable lifting devices, e.g. overhead crane or industrial truck. See section 6.6 Weights – Mass.

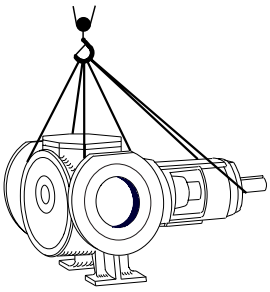

Always use two or more lifting slings. Make sure they are secured in such a way as to prevent them from slipping. The pump unit should be in a straight fashion.

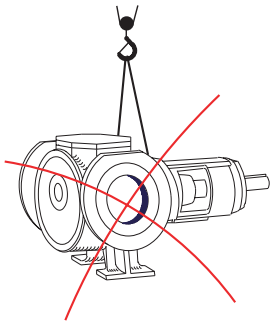

Never lift the pump unit with only two fastening points. Incorrect lift can cause personal injury and/or damage to the pump unit.

1.2.3 Storage

If the pump is not commissioned immediately, the shaft should be turned a full turn once every week. This ensures a proper distribution of the conservating oil.

1.3 Safety

1.3.1 General

Important!
The pump must not be used for other purposes than recommended and quoted for without consulting your local supplier.

A pump must always be installed and used in accordance with existing national and local sanitary and safety regulations and laws.

When ATEX pump/pump unit is supplied, the separate ATEX manual must be considered

- Always wear suitable safety clothing when handling the pump.

- Anchor the pump properly before start-up to avoid personal injury and/or damage to the pump unit.

- Install shut-off valves on both sides of the pump to be able to shut off the inlet and outlet before service and maintenance. Check to see that the pump can be drained without injuring anyone and without contaminating the environment or nearby equipment.
- Make sure that all movable parts are properly covered to avoid personal injury.

- All electrical installation work must be carried out by authorized personnel in accordance with EN60204-1 and/or local regulations. Install a lockable circuit breaker to avoid inadvertent starting. Protect the motor and other electrical equipment from overloads with suitable equipment. The electric motors must be supplied with ample cooling air.

  In environments where there is risk of explosion, motors classified as explosion-safe must be used, along with special safety devices. Check with the governmental agency responsible for such precautions.

- Improper installation can cause fatal injuries.
- Dust, liquids and gases that can cause overheating, short circuits, corrosion damage and fire must be kept away from motors and other exposed equipment.

- If the pump handles liquids hazardous for person or environment, some sort of container must be installed into which leakage can be led. All (possible) leakage should be collected to avoid contamination of the environment.
- Keep arrows and other signs visible on the pump.

- If the surface temperature of the system or parts of the system exceeds 60°C, these areas must be marked with warning text reading "Hot surface" to avoid burns.

- The pump unit must not be exposed to rapid temperature changes of the liquid without prior pre-heating/pre-cooling. Big temperature changes can cause crack formation or explosion, which in turn can entail severe personal injuries.
- The pump must not operate above stated performance. See section 3.5 Main characteristics.
- Before intervening in the pump/system, the power must be shut off and the starting device be locked. When intervening in the pump unit, follow the instructions for disassembly/assembly, chapter 4.0. If the instructions are not followed, the pump or parts of the pump can be damaged. It will also invalidate the warranty.
- Gear pumps may never run completely dry. Dry running produces heat and can cause damage to internal parts such as bush bearings and shaft seal. When dry running is required, the pump has e.g. to be run a short time with liquid supply.

  Note! A small quantity of liquid should remain in the pump to ensure lubrication of internal parts. If there is a risk for dry running for a longer period, install a suitable dry running protection. Consult your local supplier.
- If the pump does not function satisfactorily, contact your local supplier.

1.3.2 Pump units

1.3.2.1 Pump unit handling

Use an overhead crane, forklift or other suitable lifting device.

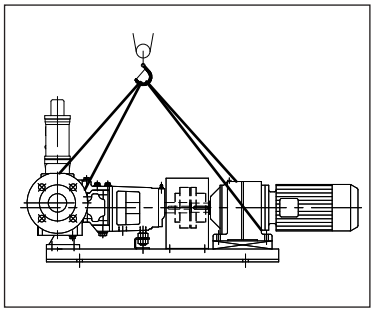

Secure lifting slings around the front part of the pump and the back part of the motor. Make sure that the load is balanced before attempting the lift.
***NB!** Always use two lifting slings.*

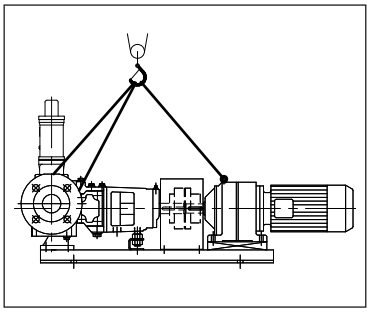

If there are lifting rings on both the pump and the motor the slings may be fastened to these.
***NB!** Always use two lifting slings.*

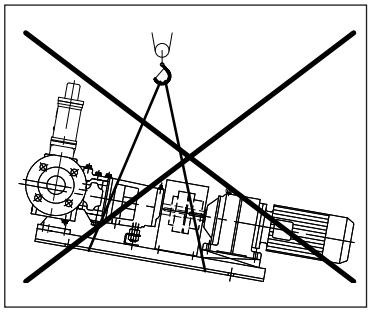

Warning
Never lift the pump unit with only one fastening point. Incorrect lifts can result in personal injury and/or damage to the unit.

1.3.2.2 Installation

All pump units should be equipped with a locking safety switch to prevent accidental start during installation, maintenance or other work on the unit.

Warning
The safety switch must be turned to off and locked before any work is carried out on the pump unit. Accidental start can cause serious personal injury.

The pump unit must be mounted on a level surface and either be bolted to the foundation or be fitted with rubber-clad feet.

The pipe connections to the pump must be stress-free mounted, securely fastened to the pump and well supported. Incorrectly fitted pipe can damage the pump and the system.

Warning
Electric motors must be installed by authorized personnel in accordance with EN60204-1. Faulty electrical installation can cause the pump unit and system to be electrified, which can lead to fatal injuries.

Electric motors must be supplied with adequate cooling ventilation. Electric motors must not be enclosed in airtight cabinets, hoods etc.

Dust, liquids and gases which can cause overheating and fire must be diverted away from the motor.

Warning
Pump units to be installed in potentially explosive environments must be fitted with an Ex-class (explosion safe) motor. Sparks caused by static electricity can give shocks and ignite explosions. Make sure that the pump and system are properly grounded. Check with the proper authorities for the existing regulations. A faulty installation can lead to fatal injuries.

1.3.2.3 Before commissioning the pump unit

Read the pump's operating and safety manual. Make sure that the installation has been correctly carried out according to the relevant pump's manual.

Check the alignment of the pump and motor shafts. The alignment may have been altered during transport, lifting and mounting of the pump unit. For safe disassembly of the coupling guard see below: Disassembly/assembly of the coupling guard.

Warning
The pump unit must not be used with other liquids than those for which it was recommended and sold. If there are any uncertainties contact your sales representative. Liquids, for which the pump is not appropriate, can damage the pump and other parts of the unit as well as cause personal injury.

1.3.2.4 Disassembly/assembly of the coupling guard

The coupling guard is a fixed guard to protect the users and operator from fastening and injuring themselves on the rotating shaft/shaft coupling. The pump unit is supplied with factory mounted guards with certified maximum gaps in accordance with standard DIN EN ISO 13857.

Warning
The coupling guard must never be removed during operation. The locking safety switch must be turned to off and locked. The coupling guard must always be reassembled after it has been removed. Make sure to also reassemble any extra protective covers. There is a risk of personal injury if the coupling guard is incorrectly mounted.

a) Turn off and lock the power switch.

b) Disassemble the coupling guard.

c) Complete the work.

d) Reassemble the coupling guard and any other protective covers. Make sure that the screws are properly tightened.

1.3.2.5 Name plate – Declaration of Conformity

Always quote the serial number on the name plate together with questions concerning the pump unit, installation, maintenance etc.

When changing the operating conditions of the pump please contact your supplier to ensure a safe and reliable working pump.

This also applies to modifications on a larger scale, such as a change of motor or pump on an existing pump unit.

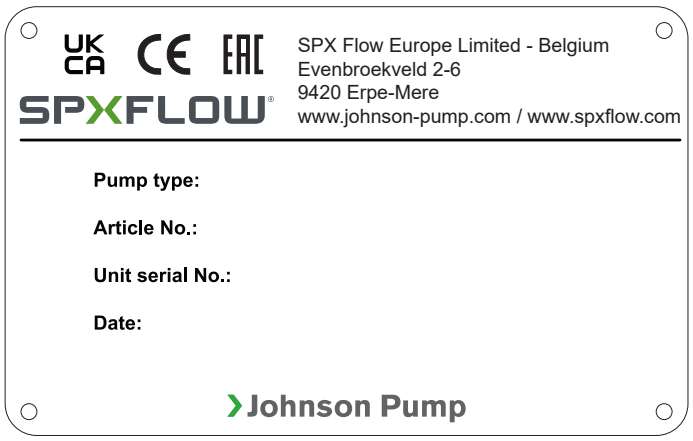

1.4 Technical conventions

Quantity	Symbol	Unit
Dynamic viscosity	μ	mPa.s = cP (Centipoise)
Kinematic viscosity	$\nu = \frac{\mu}{\rho}$	ρ = density $\left[\frac{kg}{dm^3}\right]$ ν = kinematic viscosity $\left[\frac{mm^2}{s}\right]$ = cSt (Centistokes)
Note! *In this manual only dynamic viscosity is used.*		
Pressure	p	[bar]
	Δp	Differential pressure = [bar]
	p_m	Maximum pressure at discharge flange (design pressure) = [bar]
Note! *In this manual, unless otherwise specified - pressure is relative pressure [bar].*		
Net Positive Suction Head	NPSHa	The available Net Positive Suction Head is the total absolute inlet pressure at the pump suction connection, minus the vapour pressure of the pumped liquid. NPSHa is expressed in meter liquid column. It is the responsibility of the user to determine the NPSHa value.
	NPSHr	Net Positive Suction Head Required is the NPSH determined, after testing and calculation, by the pump manufacturer to avoid performance impairment due to cavitation within the pump at rate capacity. The NPSHr is measured at the suction flange, at the point where the capacity drop results in a pressure loss of at least 4%.
Note! *In this manual, unless otherwise specified, NPSH = NPSHr*		
When selecting a pump, ensure that NPSHa is at least 1 m higher than the NPSHr.		

2.0 Pump description

TopGear/GM pumps are rotary positive displacement pumps with internal gear. They are made of cast iron. TG GM pumps are assembled from modular elements, which allows a variety of constructions: different shaft sealings (packing and/or mechanical seal), heating / cooling jackets (steam or thermal oil), several sleeve bearings, gear and shaft materials and mounted relief valve and electrical heating.

2.1 Type designation

The pump properties are encoded in the following type indication, which is to be found on the name plate.

Examples:

TG	GM	58-80		G	2	T	T	UR	6	U	R8	GCD WV BV
1	2	3	4	5	6	7	8	9	10	11	12	13

TG	GM	6-40	FD	G	1	O	O	SG	2	S	G2	PRAW
1	2	3	4	5	6	7	8	9	10	11	12	13

1. **Pump family name**
   TG = TopGear

2. **Pump range name**
   G = General purpose
   M = Multi optional

3. **Hydraulics indicated with displacement volume per 100 revolution (in dm^3) and nominal port diameter (in mm)**
   TG GM2-25
   TG GM3-32
   TG GM6-40
   TG GM15-50
   TG GM23-65
   TG GM58-80
   TG GM86-100
   TG GM120-100
   TG GM185-125
   TG GM270-150
   TG GM360-150

4. **Application**
   Non-food
   FD Food

5. **Pump material**
   G Pump in cast iron

6. **Port connection type**
   1 Thread connections
   2 PN16 flanges to DIN2533
   3 PN20 flanges to ANSI 150 lbs

Examples:

TG	GM	58-80		G	2	T	T	UR	6	U	R8	GCD WV BV
1	2	3	4	5	6	7	8	9	10	11	12	13

TG	GM	6-40	FD	G	1	O	O	SG	2	S	G2	PRAW
1	2	3	4	5	6	7	8	9	10	11	12	13

7. Jacket options for pump cover

- O Pump cover without jackets
- S Pump cover with jacket and thread connection
- T Pump cover with jacket and flange connection
- E1 Electrical heating idler pin – loss factor 15 W/°C/m² (indoor installation) – 110V
- E2 Electrical heating idler pin – loss factor 15 W/°C/m² (indoor installation) – 230V
- E3 Electrical heating idler pin – loss factor 20 W/°C/m² (outside but protected) – 110V
- E4 Electrical heating idler pin – loss factor 20 W/°C/m² (outside but protected) – 230V
- E5 Electrical heating idler pin – loss factor 25 W/°C/m² (outside unprotected) – 110V
- E6 Electrical heating idler pin – loss factor 25 W/°C/m² (outside unprotected) – 230V

8. Jacket options around shaft seal

- O Shaft seal without jackets
- S Shaft seal with jacket and thread connection
- T Shaft seal with jacket and flange connection
- E1 Electrical heating interm. casing – loss factor 15 W/°C/m² (indoor installation) – 110V
- E2 Electrical heating interm. casing – loss factor 15 W/°C/m² (indoor installation) – 230V
- E3 Electrical heating interm. casing – loss factor 20 W/°C/m² (outside but protected) – 110V
- E4 Electrical heating interm. casing – loss factor 20 W/°C/m² (outside but protected) – 230V
- E5 Electrical heating interm. casing – loss factor 25 W/°C/m² (outside unprotected) – 110V
- E6 Electrical heating interm. casing – loss factor 25 W/°C/m² (outside unprotected) – 230V

9. Idler bush and idler materials

- SG Idler bush in hardened steel with idler in iron
- CG Idler bush in carbon with idler in iron
- BG Idler bush in bronze with idler in iron
- HG Idler bush in ceramic with idler in iron

- SS Idler bush in hardened steel with idler in steel
- CS Idler bush in carbon with idler in steel
- BS Idler bush in bronze with idler in steel
- HS Idler bush in ceramic with idler in steel
- US Idler bush in hard metal with idler in steel

- BR Idler bush in bronze with idler in stainless steel
- CR Idler bush in carbon with idler in stainless steel
- HR Idler bush in ceramic with idler in stainless steel
- UR Idler bush in hard metal with idler in stainless steel

10. Idler pin materials

- 2 Idler pin in hardened steel
- 5 Idler pin in nitrided stainless steel
- 6 Idler pin in hard coated stainless steel

Examples:

TG	GM	58-80		G	2	T	T	UR	6	U	R8	GCD WV BV
1	2	3	4	5	6	7	8	9	10	11	12	13

TG	GM	6-40	FD	G	1	O	O	SG	2	S	G2	PRAW
1	2	3	4	5	6	7	8	9	10	11	12	13

11. Bush on shaft materials

S	Bush in hardened steel
C	Bush in carbon
H	Bush in ceramic
U	Bush in hard metal
B	Bush in bronze

12. Rotor and shaft materials

G2	Rotor in iron and shaft in hardened steel
G5	Rotor in iron and shaft in nitrided stainless steel
G6	Rotor in iron and shaft in hard coated stainless for packing
G8	Rotor in iron and shaft in hard coated stainless for mechanical seal
N2	Rotor in nitrided nodular iron and shaft in hardened steel
N5	Rotor in nitrided nodular iron and shaft in nitrided stainless steel
N6	Rotor in nitrided nodular iron and shaft in hard coated stainless for packing
N8	Rotor in nitrided nodular iron and shaft in hard coated stainless for mechanical seal
R2	Rotor in stainless steel and shaft in hardened steel
R5	Rotor in stainless steel and shaft in nitrided stainless steel
R6	Rotor in stainless steel and shaft in hard coated stainless steel for packing
R8	Rotor in stainless steel and shaft in hard coated stainless steel for mechanical seal

13. Shaft seal arrangements

Packing version without lantern ring

PO TC	PTFE graphited packing rings
PO AW	Aramide-white packing rings
PO CC	Graphite fibre packing rings
PO XX	Packing version parts – rings on request

Packing version with lantern ring

PQ TC	PTFE graphited packing rings
PQ AW	Aramide-white packing rings
PQ CC	Graphite fibre packing rings
PQ XX	Packing version parts – rings on request

Reverted packing version; chocolate execution

PR TC	Packing rings PTFE graphited
PR AW	Packing rings aramide-white
PR XX	Packing version parts – rings on request

Single mechanical seal Burgmann type eMG12 to be used with set ring (only for Europe)

GS AV	Single mech. seal Burgmann eMG12 Carbon/eSiC-Q7/FPM (Fluorocarbon)
GS WV	Single mech. seal Burgmann eMG12 eSiC-Q7/eSiC-Q7/FPM (Fluorocarbon)

Examples:

TG	GM	58-80		G	2	T	T	UR	6	U	R8	GCD WV BV
1	2	3	4	5	6	7	8	9	10	11	12	13

TG	GM	6-40	FD	G	1	O	O	SG	2	S	G2	PRAW
1	2	3	4	5	6	7	8	9	10	11	12	13

13. Shaft seal arrangements (cont´d)

Single mechanical seal Burgmann type MG12 to be used with set ring (only for India)

GS AV	Single mech. seal Burgmann MG12; Carbon/SiC/FPM (Fluorocarbon)
GS WV	Single mech. seal Burgmann MG12; SiC/SiC/FPM (Fluorocarbon)

Single mechanical seal Burgmann type M7N (only for Europe)

GS HV	Single mech. seal Burgmann M7N; SiC/Carbon/FPM (Fluorocarbon)
GS HT	Single mech. seal Burgmann M7N SiC/Carbon/KALREZ
GS WV	Single mech. seal Burgmann M7N; SiC/SiC/FPM (Fluorocarbon)
GS WT	Single mech. seal Burgmann M7N SiC/SiC/KALREZ

Remark: EPDM and FFKM (Chemraz®) O-ring sets available on request

Single mechanical seal Burgmann type M7N (only for India)

GS HV	Single mech. seal Burgmann M7N; SiC/Carbon/FPM (Fluorocarbon)
GS HT	Single mech. seal Burgmann M7N; SiC/Carbon/PTFE-wrapped
GS WV	Single mech. seal Burgmann M7N; SiC/SiC/FPM (Fluorocarbon)
GS WT	Single mech. seal Burgmann M7N; SiC/SiC/PTFE-FFKM

Remark: EPDM and FFKM (Chemraz®) O-ring sets available on request

Single mechanical seal option without mechanical seal

GS XX	Single seal parts – seal on request

Single mechanical seal cartridge

GCT WV	Cartex TN3 (with throttle bush); SiC/SiC/FPM (Fluorocarbon)
GCT WT	Cartex TN3 (with throttle bush); SiC/SiC/PTFE
GCQ WV	Cartex QN3 (with lip ring); SiC/SiC/FPM (Fluorocarbon)
GCQ WT	Cartex QN3 (with lip ring); SiC/SiC/PTFE

Remark: EPDM and FFKM (Chemraz®) O-ring sets available on request

Double mechanical seal cartridge

GCD WV BV	Cartex DN3; SiC/SiC/FPM (Fluorocarbon)-SiC/Carbon/FPM (Fluorocarbon)
GCD WT BV	Cartex DN3; SiC/SiC/PTFE-SiC/Carbon/FPM (Fluorocarbon)

Remark: EPDM and FFKM (Chemraz®) O-ring sets available on request

GCX XX XX	Cartridge seal version without cartridge seal (cartridge seal on request)
GG XX XX	Double mechanical seal tandem version; without mechanical seals (seals on request)
GD XX XX	Double mechanical seal back-to-back version; without mechanical seals (seals on request)

Triple PTFE lip-seal cartridge

LCT TV	Cartridge triple lip seal; PTFE seals / FKM Viton (Fluoroelastomer) o-rings
LCT XX	Cartridge triple lip seal; PTFE seals / no o-rings

3.0 General technical information

3.1 Pump standard parts

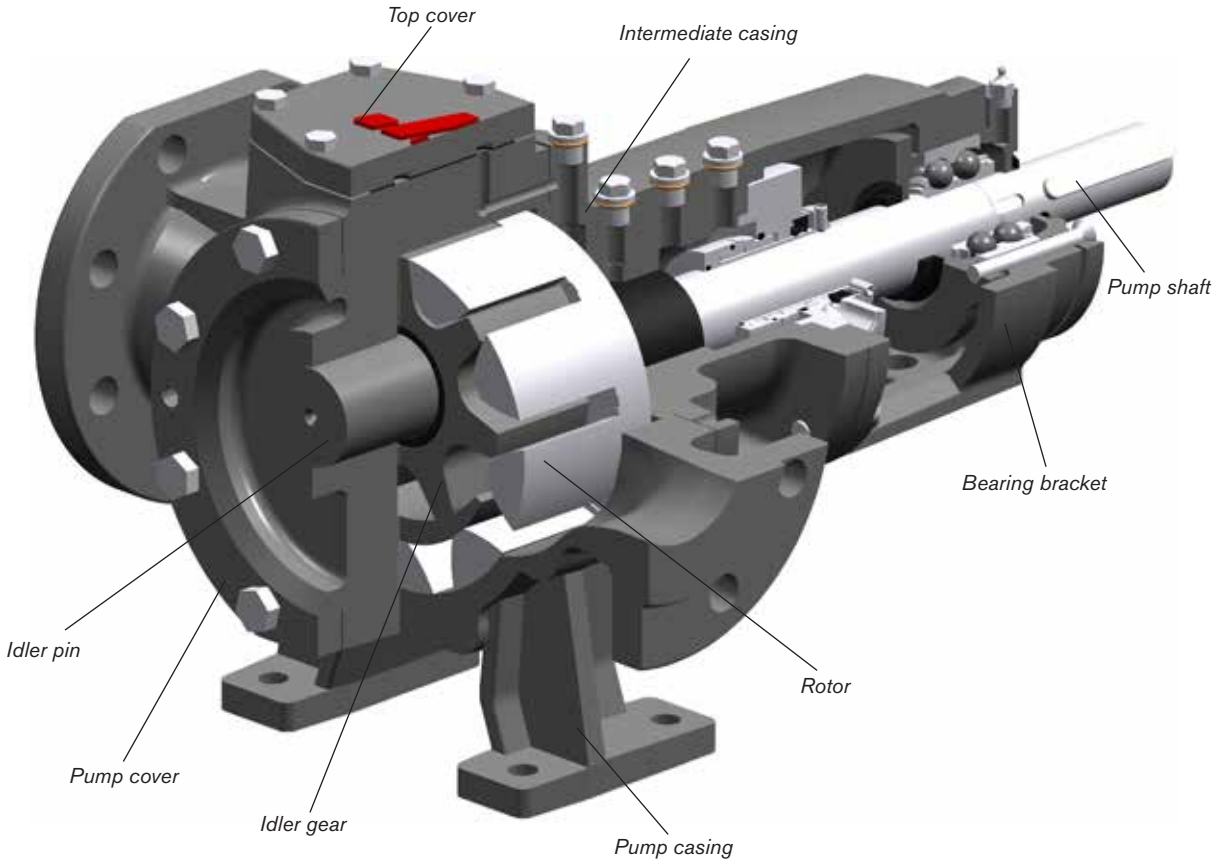

3.2 Operating principle

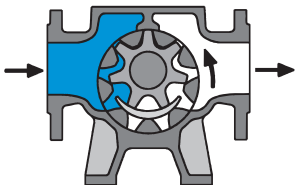

As the rotor and idler gear unmesh, an underpressure is created and the liquid enters the new created cavities.

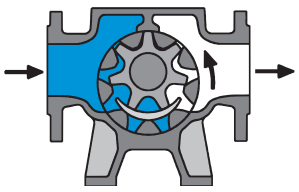

Liquid is transported in sealed pockets to the discharge side. The walls of the pump casing and the crescent are creating a seal and separate suction from discharge side.

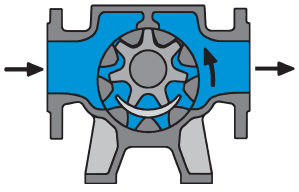

The rotor and idler gear mesh and liquid is being pushed into the discharge line.

Reversing the shaft rotation will reverse the flow through the pump as well.

3.2.1 Self-priming operation

TopGear pumps are self-priming when sufficient liquid is present in the pump to fill up the clearances and the dead spaces between the teeth. (For self-priming operation see also section 3.19.6.2 Piping).

3.2.2 Safety relief valve – Working principle

The positive displacement principle requires the installation of a safety relief valve protecting the pump against overpressure. It can be installed on the pump or in the installation.

This safety relief valve limits the differential pressure (Δp) between suction and discharge, not the maximum pressure within the installation.

For example, as media cannot escape when the discharge side of the pump is obstructed, an over-pressure may cause severe damage to the pump.
The safety relief valve provides an escape path, rerouting the media back to the suction side when reaching a specified pressure level.

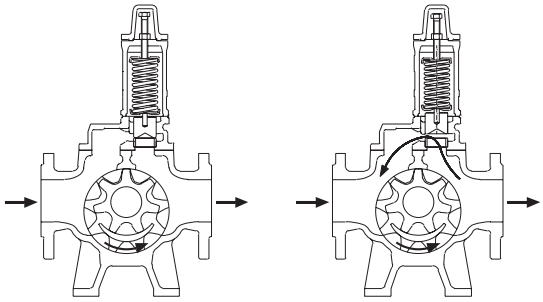

- The safety relief valve protects the pump against over-pressure only in one flow direction. The safety relief valve will **not** provide protection against over-pressure when the pump rotates in the opposite direction. When the pump is used in both directions, a double safety relief valve is required.
- An open safety relief valve indicates that the installation is not functioning properly. The pump must be shut down at once. Find and solve the problem before restarting the pump.
- When the safety relief valve is not installed on the pump, other protections against over-pressure have to be provided.
- ***Note!*** *Do not use the safety relief valve as a flow regulator. The liquid will circulate only through the pump and will heat up quickly.*

  Contact your local distributor if a flow regulator is required.

3.3 Sound

TopGear pumps are rotary displacement pumps. Because of the contact between internal parts (rotor/idler), pressure variations etc. they produce more noise than for example centrifugal pumps. Also the sound coming from drive and installation must be taken into consideration.
As the sound level at the operating area may exceed 85 dB(A), ear protection must be worn.
See also section 3.7 Sound level.

3.4 General performance

Important!
The pump is calculated for the liquid transport as described in the quotation. Contact your local distributor if one or several application parameters change.

Liquids not suitable for the pump can cause damages to the pump unit and imply risk of personal injury.

Correct application requires that consideration be given to all of the following:
Product name, concentration and density. Product viscosity, product particles (size, hardness, concentration, shape), product purity, product temperature, inlet and outlet pressure, RPM, etc.

3.5 Main characteristics

The pump size is designated by the displacement volume of 100 revolutions expressed in litres (or dm^3) but rounded followed by the nominal port diameter expressed in millimetres.

Pump size TG GM	d (mm)	B (mm)	D (mm)	Vs-100 (dm^3)	n.max (min^{-1})	n.mot (min^{-1})	Q.th (l/s)	Q.th (m^3/h)	v.u (m/s)	v.i (m/s)	Δp (bar)	p.test (bar)
2-25	25	13.5	65	1.83	1800		0.5	2.0	6.1	0.7	16	24
						1450	0.4	1.6	4.9	0.5		
3-32	32	22	65	2.99	1800		0.9	3.2	6.1	1.1	16	24
						1450	0.7	2.6	4.9	0.9		
6-40	40	28	80	5.8	1800		1.7	6.3	7.5	1.4	16	24
						1450	1.4	5.0	6.1	1.1		
15-50	50	40	100	14.5	1500		3.6	13.1	7.9	1.8	16	24
						1450	3.5	12.6	7.6	1.8		
23-65	65	47	115	22.7	1500		5.7	20.4	9.0	1.7	16	24
						1450	5.5	19.7	8.7	1.7		
58-80	80	60	160	57.6	1050		10.1	36.3	8.8	2.0	16	24
						960	9.2	33.2	8.0	1.8		
86-100	100	75	175	85.8	960	960	13.7	49.4	8.8	1.7	16	24
120-100	100	90	190	120	750		15.0	54.0	7.5	1.9	16	24
					900		18.0	65.0	9.0	2.3		
						725	14.5	52.2	7.2	1.8		
185-125	125	100	224	185	750		23	83	8.8	1.9	16	24
						725	22	80	8.5	1.8		
270-150	150	118	250	270	600		27	98	7.85	1.5	16	24
360-150	150	125	280	360	600		36	130	8.8	2.0	16	24

Legend

d : port diameter (inlet and outlet port)
B : width of idler gear and length of rotor teeth
D : peripheral diameter of rotor (outside diameter)
Vs-100 : displaced volume pro 100 revolutions
n.max : maximum allowable shaft speed in rpm
n.mot : normal speed of direct drive electric motor (at 50Hz frequency)
Q.th : theoretical capacity without slip at differential pressure = 0 bar
v.u : peripheral velocity of rotor
v.i : velocity of liquid in the ports at Qth (inlet and outlet port)
Δp : maximum working pressure = differential pressure
p.test : hydrostatic test pressure

Maximum viscosity

Shaft sealing type	Maximum viscosity (mPa.s) *)
Packed gland PO, PQ, PR	80 000
Double mechanical seal	
Back-to-back – GD and GCD pressurized	80 000
Tandem – GG and GCD not pressurized	5 000
Single mechanical seal	
GS with Burgmann MG12 or eMG12	3 000
GS with Burgmann M7N	5 000
GCQ and GCT cartridge	5 000
Triple PTFE lip-seal	80 000

**) Remark:*
Figures are for Newtonian liquids at operating temperature. The maximum allowable viscosity between the sliding faces of the mechanical seal depends on nature of liquid (Newtonian, plastic etc.), the sliding speed of the seal faces and the mechanical seal construction.

3.6 Pressure

Differential pressure or working pressure (p) is the pressure on which the pump normally operates.
TopGear GM-lines have the maximum differential pressure at 16 bar.

The **hydrostatic test pressure** is 1.5 times the differential pressure i.e.:
TopGear GM-lines have the hydrostatic test pressure at 24 bar.

Following figure gives a graphical presentation of the several kind of pressures.

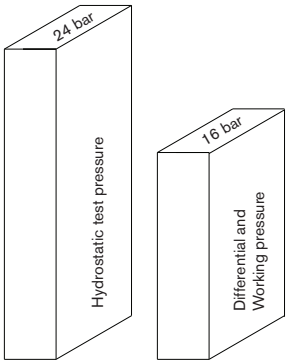

3.7 Sound level

3.7.1 Sound level of a pump without drive

Sound pressure level (L_{pA})
The following table gives an overview of the A-weightened sound pressure level, L_{pA} emitted by a pump without drive, measured according to ISO3744 and expressed in decibels dB(A). The reference sound pressure is 20µPa.

The values depend on the position from where one measures and were therefore measured at the front of the pump, at distance of 1 meter from the pump cover and were corrected for background noise and reflections.

The values listed are the highest measured values under following operating conditions.

- Working pressure: up to 10 bar.
- Pumped medium: water, viscosity = 1 mPa.s
- —% n_{max} = — % maximum shaft speed

TG GM pump size	n_{max}(min-1)	Lpa (dB(A))				Ls (dB(A))
		25% n_{max}	50%n_{max}	75%n_{max}	100%n_{max}	
2-25	1800	51	62	68	72	9
3-32	1800	53	65	72	76	9
6-40	1800	57	68	76	80	9
15-50	1500	61	72	79	83	9
23-65	1500	63	75	81	85	10
58-80	1050	67	79	85	89	10
86-100	960	69	80	86	90	11
120-100	750	70	81	87	91	11
185-125	750	71	82	87	91	11
270-150	600	72	83	89	92	11
360-150	600	72	83	89	92	11

Sound power level (L_{WA})
The sound power L_W is the power emitted by the pump as sound waves and is used to compare sound levels of machines. It is the sound pressure Lp that acts on a surrounding surface at distance of 1 metre.

$L_{WA} = L_{pA} + Ls$

The A-weightened sound power level L_{WA} is also expressed in decibels dB(A).
The reference sound power is 1 pW (= 10^{-12} W). L_S is the logarithm of the surrounding surface at distance of 1 metre from the pump, expressed in dB(A) and is listed in the last column of above

table.

3.7.2 The sound level of the pump unit

The sound level of the drive (motor, transmission, . . .) must be added to the sound level of the pump itself to determine the total sound level of the pump unit. The sum of several sound levels must be calculated logarithmically.

For a quick determination of the total sound level the following table can be used:

L_1-L_2	0	1	2	3	4	5	6
$L[f(L_1-L_2)]$	3.0	2.5	2.0	1.7	1.4	1.2	1.0

$L_{total} = L_1 + L_{corrected}$

where
- L_{total} : the total sound level of the pump unit
- L_1 : the highest sound level
- L_2 : the lowest sound level
- $L_{corrected}$: term, depending on the difference between both sound levels

For more than two values this method can be repeated.

Example:
- Drive unit : L_1 = 79 dB(A)
- Pump : L_2 = 75 dB(A)
- Correction : $L_1 - L_2$ = 4 dB(A)
- According to the table : $\mathbf{L_{corrected} = 1.4\ dB(A)}$

L_{total} = 79 + 1.4 = 80.4 dB(A)

3.7.3 Influences

The real sound level of the pump unit can for several reasons deviate from the values listed in the tables above.

- Noise production decreases when pumping high viscosity liquids due to better lubricating and damping properties. Moreover the resistance torque of the idler is increasing due to higher liquid friction which results in lower vibration amplitude.
- Noise production increases when pumping low viscosity liquids combined with low working pressure because the idler can move freely (lower charge, lower liquid friction) and the liquid does not damp much.
- Vibrations in piping, vibrating of the base plate etc. will make the installation produce more noise.

3.8 Material options

Maximum temperature

Overall temperature of TopGear GM pumps is 300°C but:

1. Maximum temperature of size GM2-25 and GM3-32 is limited to 200°C due to ball bearing type 2RS.

   Minimum temperature is -20°C.

2. Temperature limits must be considered depending on the used materials for bearing bushes and shaft sealing.

3.9 Jacket options

S-jackets are designed for use with saturated steam or with non-dangerous media. They are provided with cylindrical threaded connections according to ISO 228-I.
Maximum temperature: 200°C
Maximum pressure: 10 bar

Notice that the maximum pressure of 10 bar will be the limiting factor for use with saturated steam. Saturated steam at 10 bar gives a temperature of 180°C.

In the TG GM-line there are several configurations for the jacket around the shaft seal

TG GM pump size	S-jacket configuration	Material
2-25 3-32	Two parts sealed with O-ring	Cast iron GG25
6-40 15-50 23-65	Intermediate casing with covers	Intermediate casing: GGG40 Covers: Steel
58-80 86-100 120-100 185-125 270-150 360-150	Intermediate casing with cast on integrated jackets	Cast iron GG25

T-jackets are designed for use with thermal oil and apply to the DIN4754 safety standard for thermal oil transfer. This DIN standard specifies flange connections for temperature from 50°C upwards and jackets of ductile material for temperature from 200°C upwards. Both are provided in the T-design.
T-jackets could also be used for over heated steam or more dangerous media.
The flanges have a special shape with welding neck based on PN16 dimensions.
Maximum temperature: 300°C
Maximum pressure at 300°C: 12 bar

3.10 Electrical heating

Electrical heating is especially designed for pumping bitumen, heating the pump up from ambient air temperature to approximately 250°C. It can be used with an electric supply of 110V or 230V.
In case of other applications and/or lower or higher temperatures, please contact your local distributor.

Electrical heating is available on the pumpcover (in the idler pin) and/or in the intermediate casing for the following sizes and environments, see table.

Availability of electrical heating in the TopGear GM-line (- : not available / + : available)						
TG GM pump size	Loss factor 25 W/°C/m² Outside unprotected		Loss factor 20 W/°C/m² Outside but protected from bad weather 1)		Loss factor 15 W/°C/m² Indoor installation	
	Idler pin	Intermediate casing	Idler pin	Intermediate casing	Idler pin	Intermediate casing
15-50	-	-	-	-	+	-
23-65	-	-	-	-	+	-
58-80	+	+	+	+	+	+
86-100	+	+	+	+	+	+
120-100	+	+	+	+	+	+
185-125	+	+	+	+	+	+
270-150	+	+	+	+	+	+
360-150	+	+	+	+	+	+

1) meaning raining and wind can't have free play to the pump because of roof or shadowed by other equipment

3.11 Internals

3.11.1 Bush materials

Overview of bush materials and application field

Material Code		S	C	B	H	U
Material		**Steel**	**Carbon**	**Bronze**	**Ceramic**	**Hard metal**
Hydrodynamical lubrication	if yes	to maximum working pressure = 16 bar				
	if no	6 bar (*)	10 bar (*)	6 bar (*)	6 bar (*)	10 bar (*)
Corrosive resistance		Fair	Good	Fair	Excellent	Good
Abrasive resistance		Slight	None	None	Good	Good
Dry running allowed		No	Yes	Moderate	No	No
Sensitive to thermal shock		No	No	No	Yes dT<90°C	No
Sensitive to blistering in oil		No	> 180°C	No	No	No
Oil aging		No	No	> 150°C	No	No
Food processing allowed		Yes	No (antimony)	No (lead)	No (traceability)	Yes

(*) These are not absolute figures. Higher or lower values possible in function of the application, expected life time etc

3.11.2 Maximum temperature of internals

For some material combinations the general temperature performances must be limited.
The maximum allowable working temperature of internals depends on the combination of used materials and their thermal expansions and the interference fit to hold the bearing bush fixed.

- Some bushbearings have an extra locking screw. In this case the maximum allowable temperature is based on the most probable interference fit.
- In case the bearing bush has no locking screw because material and construction do not allow concentrated stress the maximum allowable temperature is based on the minimum interference fit.

Maximum temperature (°C) of idler bush bearing material and idler material combinations

TG GM pump size	Bush and Idler materials (°C)												
	Cast iron idler G				Steel idler S					Stainless steel idler R			
	SG*)	CG	BG	HG	SS*)	CS	BS	HS	US	BR	CR	HR	UR
2-25	200	200	200	200	–	–	–	–	–	200	200	200	200
3-32	200	200	200	200	–	–	–	–	–	200	200	200	200
6-40	300	280	240	240	300	250	300	200	240	300	250	200	240
15-50	300	280	240	240	300	250	300	200	240	300	250	200	240
23-65	300	300	250	240	300	280	300	200	240	300	280	200	240
58-80	300	300	250	240	300	280	300	200	240	300	280	200	240
86-100	300	300	250	280	300	280	300	240	240	300	280	240	240
120-100	300	300	250	280	300	280	300	240	240	300	280	240	240
185-125	300	300	250	300	300	280	300	260	240	300	280	260	240
270-150	300	300	250	300	300	280	300	260	240	300	280	260	240
360-150	300	300	250	300	300	280	300	260	240	300	280	260	240

**) Remark: Hardness relief of steel bush (S) and hardened steel pin (2) above 260°C*

Maximum temperature (°C) of rotor bush bearing

TG GM pump size	Bush on shaft materials (°C)				
	Casing G – Cast iron				
	S*)	C	H	U	B
2-25 / S*)	200	200	200	200	200
3-32 / S*)	200	200	200	200	200
6-40	300	300	300	240	300
15-50	300	300	300	240	300
23-65	300	300	300	240	300
58-80	300	300	300	240	300
86-100	300	300	300	240	300
120-100	300	300	300	240	300
185-125	300	300	300	240	300
270-150	300	300	300	240	300
360-150	300	300	300	240	300

**) Remark: Hardness relief of steel bush (S) and hardened steel shaft (2) above 260°C*

3.11.3 Operation under hydrodynamic lubrication conditions

Hydrodynamic lubrication could be important criteria for bush material selection.
If the bush bearings are running under the condition of hydrodynamic lubrication there is no more material contact between bush and pin or shaft and the lifetime cycle is increased importantly.
If there is no condition for hydrodynamic lubrication, the bush bearings make material contact with pin or shaft and the wear of these parts is to be considered.

The condition of hydrodynamic lubrication is fulfilled with the following equation:

Viscosity * shaft speed / dif.pressure ≥ K.hyd

with: viscosity [mPa.s]
shaft speed [rpm]
diff.pressure [bar]
K.hyd = design constant for each pump size.

TG GM pump size	K.hyd
2-25	6000
3-32	7500
6-40	5500
15-50	6250
23-65	4000
58-80	3750
86-100	3600
120-100	2930
185-125	2500
270-150	2800
360-150	2000

3.11.4 Maximum torque of pump shaft and rotor material combination

The maximum allowable torque is a constant independent from speed and may not be exceeded to avoid damaging the pump i.e. pump shaft, rotor/shaft fitting and rotor teeth.

TG GM pump size	Mn (nominal torque) in Nm			Md (starting torque) in Nm		
	G Rotor Iron	N Rotor Nitrided nodular iron	R Rotor Stainless steel	G Rotor Iron	N Rotor Nitrided nodular iron	R Rotor Stainless steel
2-25	21	–	31	29	–	43
3-32	21	–	31	29	–	43
6-40	67	67	67	94	94	94
15-50	255	255	255	360	360	360
23-65	255	255	255	360	360	360
58-80	390	390	390	550	550	550
86-100	600	600	600	840	840	840
120-100	600	600	600	840	840	840
185-125	1300	1300	1300	1820	1820	1820
270-150	1700	1700	1700	2380	2380	2380
360-150	2000	2000	2000	2800	2800	2800

The nominal torque (Mn) has to be checked for the normal working conditions and the installed nominal motor torque (Mn.motor) but converted to the pump shaft speed.

The starting torque (Md), may not be exceeded during start up. Use this value for the maximum torque set of a torque limiter if installed on the pump shaft.

3.12 Mass moment of inertia

TG GM	2-25	3-32	6-40	15-50	23-65	58-80	86-100	120-100	185-125	270-150	360-150
J (10^{-3} x kgm^2)	0.25	0.30	0.75	3.5	6.8	32	54	88	200	326	570

3.13 Axial and radial clearances

TG GM	2-25	3-32	6-40	15-50	23-65	58-80	86-100	120-100	185-125	270-150	360-150
Minimum (µm)	80	80	90	120	125	150	165	180	190	210	225
Maximum (µm)	134	134	160	200	215	250	275	300	320	350	375

3.14 Extra clearances

To indicate required clearances a code of 4 digits, xxxx, is given on the order.
These digits refer to the following clearance classes:

C0 = Axial clearance between rotor and pump cover set at minimum
C1 = Standard clearance (not indicated because standard)
C2 = ~2 x standard clearance
C3 = 3 x standard clearance

The 4 digits indicate which clearance class is set for which part of the pump, e.g.: code 2 3 3 2

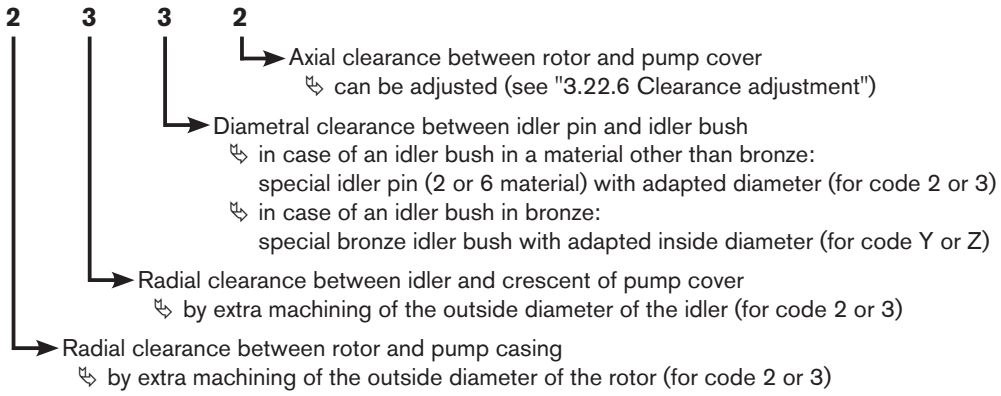

The code ''1'' always stands for ''normal'' and no special action is considered.

The indicated numbers in the tables below are average values in microns (µm).

Radial clearance on rotor, idler outside diameter – Axial clearance on pump cover

Pump size	C0 (µm) axial clearance pumpcover set minimum	C1 (µm) normal	C2 (µm) = 2.2 x C1	C3 (µm) = 3 x C1
Code rotor	1xxx	1xxx	2xxx	3xxx
Code idler	x1xx	x1xx	x2xx	x3xx
Code pump cover assembly	xxx0	xxx1	xxx2	xxx3
TG GM2-25	35	107	235	320
TG GM3-32	35	107	235	320
TG GM6-40	40	125	275	375
TG GM15-50	52	160	350	480
TG GM23-65	56	170	375	510
TG GM58-80	66	200	440	600
TG GM86-100	72	220	480	660
TG GM120-100	79	240	530	720
TG GM185-125	85	255	560	765
TG GM270-150	95	285	627	855
TG GM360-150	100	300	660	900

Diametral clearance on pin / idler bearing

Pump size	C1 (µm) normal	C2 (µm) = 2 x C1	C3 (µm) = 3 x C1
Code for adapted 2 or 6 material pin (2 or 3)	xx1x	xx2x	xx3x
Code for adapted bronze idler bush (Y or Z)	xx1x	xxYx	xxZx
TG GM2-25	90	180	270
TG GM3-32	90	180	270
TG GM6-40	110	220	330
TG GM15-50	150	300	450
TG GM23-65	160	320	480
TG GM58-80	240	480	720
TG GM86-100	275	550	825
TG GM120-100	300	600	900
TG GM185-125	325	650	975
TG GM270-150	360	792	1080
TG GM360-150	400	800	1200

Note! *the clearance between the idler pin and idler bush (3rd digit) should always be less or equal to the clearance on the idler (2nd digit). Otherwise there is a risk of contact between the idler and the crescent of the pump cover.*

3.15 Play between gear teeth

TG GM	2-25	3-32	6-40	15-50	23-65	58-80	86-100	120-100	185-125	270-150	360-150
Minimum (µm)	320	320	320	360	400	400	400	420	440	440	440
Maximum (µm)	640	640	640	720	800	800	800	840	880	880	880

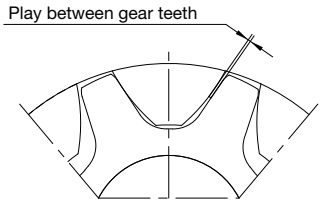

3.16 Maximum size of solid particles

TG GM	2-25	3-32	6-40	15-50	23-65	58-80	86-100	120-100	185-125	270-150	360-150
Size (µm)	80	80	90	120	125	150	165	180	190	210	225

3.17 Shaft sealings

3.17.1 Packed gland

TGGM pump size	2-25 3-32	6-40	15-50 23-65	58-80	86-100 120-100	185-125 270-150	360-150
Shaft diameter	16	22	32	40	45	55	65
Section width 5x	6	8	8	10	10	10	10
Lantern ring width	12	16	16	20	20	20	20

Dimensions in mm

3.17.2 Packing ring materials

TC

Most universal solution.
Woven shaft packing consisting of PTFE yarns with incorporated graphite and sliding matters (yarns GORE-GFO). Extreme low coefficient of friction, good thermal conductivity, high suppleness and volume stability. Suitable for general applications.

Application temperature: -200°C to +280°C
Chemical resistance: pH 0 – 14

AW

Strong fibres.
Woven shaft packing consisting of white elastic synthetic aramide yarns with silicon free lubricating matter. Wear resistant without damaging the shaft, high section density and structure strength, good sliding properties. Used where a strong yarn is necessary e.g. sugar solutions, polymers, resins, bitumen, paper industry etc. Chosen as standard for food applications.

Application temperature: -50°C to +250°C
Chemical resistance: pH 1 – 13

CC

Graphite fibres; dry running; high temperature.
Woven shaft packing consisting of pure graphite fibres without impregnation. Low coefficient of friction and good dry running properties. Used as wear resistant packing at high temperature.

Application temperature: -60°C to +500°C
Chemical resistance: pH 0 – 14

3.17.3 Mechanical seals

3.17.3.1 Mechanical seals according to EN12756 (DIN24960) – General information

In TopGear TG GM version GS, short type KU or long type NU mechanical seals can be built in. In the smallest pump sizes GM2-25 and GM3-32 only the short type KU can be built in.

In the double seal versions GG and GD only the short type KU can be built in. A double mechanical seal consist of two separately chosen single mechanical seals.

If GD type back-to-back double mechanical seal is chosen, attention must be paid for axial securing of the first stationary seat. Our pumps are provided for built in the axial securing of the stationary seat according to DIN24960. The exact securing ring must be delivered by the mechanical seal manufacturer together with the seals because the dimensions must be adapted to the form of the seat.

TG GM pump size	2-25 3-32	6-40	15-50 23-65	58-80	86-100 120-100	185-125 270-150	360-150
Shaft diameter	16	22	32	40	45	55	65
Short DIN 24960	KU016	KU022	KU032	KU040	KU045	KU055	KU065
L-1K (short KU)	35	37.5	42.5	45	45	47.5	52.5
Long DIN 24960	–	NU022	NU032	NU040	NU045	NU055	NU065
L-1N (long NU)	–	45	55	55	60	70	80

Dimensions in mm

Performance
Maximum performance such as viscosity, temperature and working pressure depends on the make of the mechanical seal and the used materials.

The following basic values can be taken into consideration.

Maximum temperatures of elastomers

Nitrile (P):	110°C
FPM (Fluorocarbon):	180°C
PTFE (solid or PTFE wrapped):	220°C
Chemraz®:	230°C
Kalrez®*:	250°C

** Kalrez® is a registered trademark of DuPont Performance Elastomers*

Maximum viscosity for GS and GG type

3000 mPas:	For single mechanical seals of light construction e.g. Burgmann MG12 or eMG12
5000 mPas:	For mechanical seals of strong torque construction (consult manufacturer).

The maximum allowed viscosity between the sliding faces of the mechanical seal depends on the nature of the liquid (Newtonian, plastic etc.), the sliding speed of the seal faces and the mechanical construction.

Maximum viscosity for GD type back-to-back double seal:
In contrast to single mechanical seals (GS) or double seals in tandem arrangement (GG) the sliding faces of the GD mechanical seal are lubricated by a barrier fluid under pressure which allows high viscous liquids to be pumped.

Second sealing box type GG and GD maximum temperature and pressure:

Maximum temperature of the second mechanical seal box:	250°C
Maximum allowable pressure of the second mechanical seal box:	16 bar.

Note! *The pressure before the first mechanical seal at pumped medium side is lower than the discharge pressure.*

3.17.3.2 Cartridge mechanical seals

In TopGear GM ranges Universal Cartridge mechanical seals could be built in from pump size GM6-40 to GM360-150.
Several functions and more complicated constructions e.g. gas seals, API conformity etc. are possible. Contact your local distributor if you have a special application or special questions.
The end plate or the gland of the cartridge mechanical seal must be adapted to the built in dimensions of the TopGear pump. See figure.

Built-in dimensions

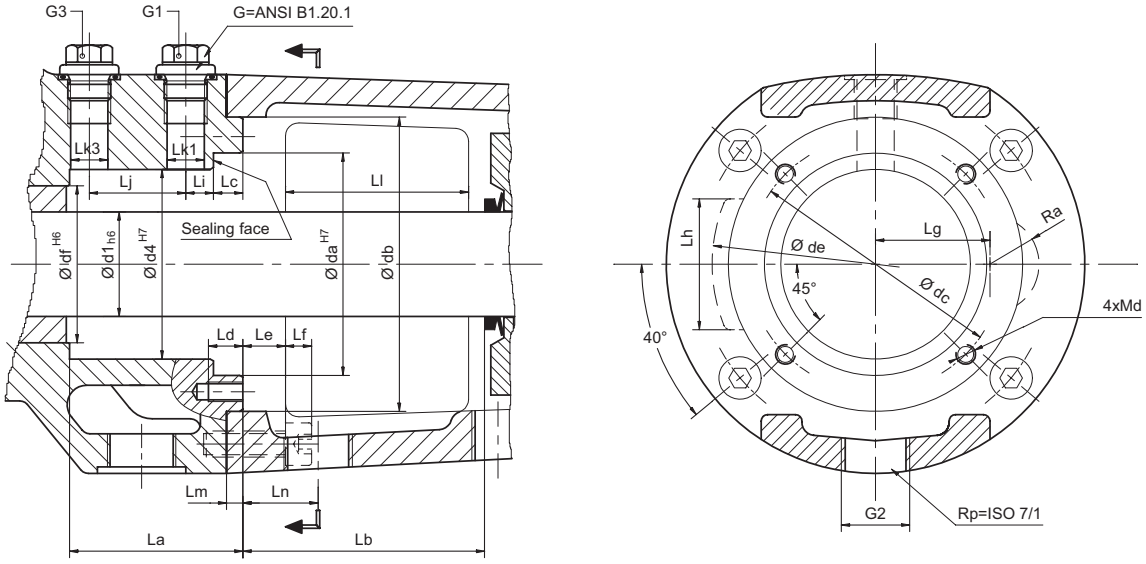

TG GM pump size	Ød1 [mm]	Ød4 [mm]	Øda [mm]	Ødb [mm]	Ødc [mm]	Øde [mm]	Ødf [mm]	4xMd [mm]	La [mm]	Lb [mm]	Lc [mm]	Ld [mm]	Le [mm]	Lf [mm]
2-25	16	32	39	60	49	66	28	4xM6	48	45	11.5	7.5	6	6
3-32	16	32	39	60	49	66	28	4xM6	48	45	11.5	7.5	6	6
6-40	22	45	52	74	62	–	38	4xM6	46	60	6	8.5	12	8
15-50	32	58	68	90	78	–	48	4xM6	53	72	9	9	13	8
23-65	32	58	68	90	78	–	48	4xM6	53	72	9	9	13	8
58-80	40	72	82	110	94	–	58	4xM8	56	90	6	12	15	12
86-100	45	77	87	120	104	–	63	4xM8	55	86	6	12	15	12
120-100	45	77	87	120	104	–	63	4xM8	55	86	6	12	15	12
185-125	55	90	106	160	124	203	75	4xM8	58	117	6	14	16	16
270-150	55	90	106	160	124	203	75	4xM8	58	117	6	14	16	16
360-150	65	105	120	170	142	180	88	4xM10	65	118	6	14	19	16

TG GM pump size	Lg [mm]	Lh [mm]	Ra [mm]	Li [mm]	Lj [mm]	ØLk1 [mm]	ØLk3 [mm]	Li [mm]	Lm [mm]	Ln [mm]	G1	G3	G2
2-25	–	30	–	11.5	20	8.8		40	6	14	G1/8”		G3/8”
3-32	–	30	–	11.5	20	8.8		40	6	14	G1/8”		G3/8”
6-40	–	–	–	8.5	24.5	11.8		62.5	4	18	G1/4”		G3/8”
15-50	35	–	15	8.5	28.5	11.8		56	5	23	G1/4”		G1/2”
23-65	35	–	15	8.5	28.5	11.8		56	5	23	G1/4”		G1/2”
58-80	40	–	23	9.5	30	11.8	19	70	5	30	G1/4”	G1/2”	G3/4”
86-100	45	–	15	9.5	29	11.8	19	70	5	30	G1/4”	G1/2”	G3/4”
120-100	45	–	15	9.5	29	11.8	19	70	5	30	G1/4”	G1/2”	G3/4”
185-125	–	95	–	10.5	31	11.8	19	90	6	29	G1/4”	G1/2”	G3/4”
270-150	–	95	–	10.5	31	11.8	19	90	6	29	G1/4”	G1/2”	G3/4”
360-150	–	74	–	13	36.5	11.8	19	95	6	36	G1/4”	G1/2”	G3/4”

3.17.4 Reverted packing execution for e.g. chocolate application

For chocolate pumping applications the PR-version is designed.

The pump shaft is sealed by means of packing rings and the bronze shaft bearing is placed outside the pumped medium and is designed to work as a packing gland. Because of the fact that, under normal conditions, the shaft bearing does not come into contact with the pumped medium, bronze can be used as material.

The bush bearing is greased by an external grease sypply. The grease has to be provided by the end user because of compatibility with the pumped liquid.

Depending of the type of chocolate extra clearances are given on Rotor, Idler, Pump cover and Idler bush bearing. **For extra clearances see 3.14.**

TG GM pump size	**6-40**	**15-30 23-65**	**58-80**	**86-100 120-100**	**185-125**	**270-150**	**360-150**
Shaft diameter (mm)	22	32	40	45	55	55	65
Section width (mm)	8	8	10	10	10	10	10
Number of rings	**see 5.2.5.7**						

Dimensions in mm

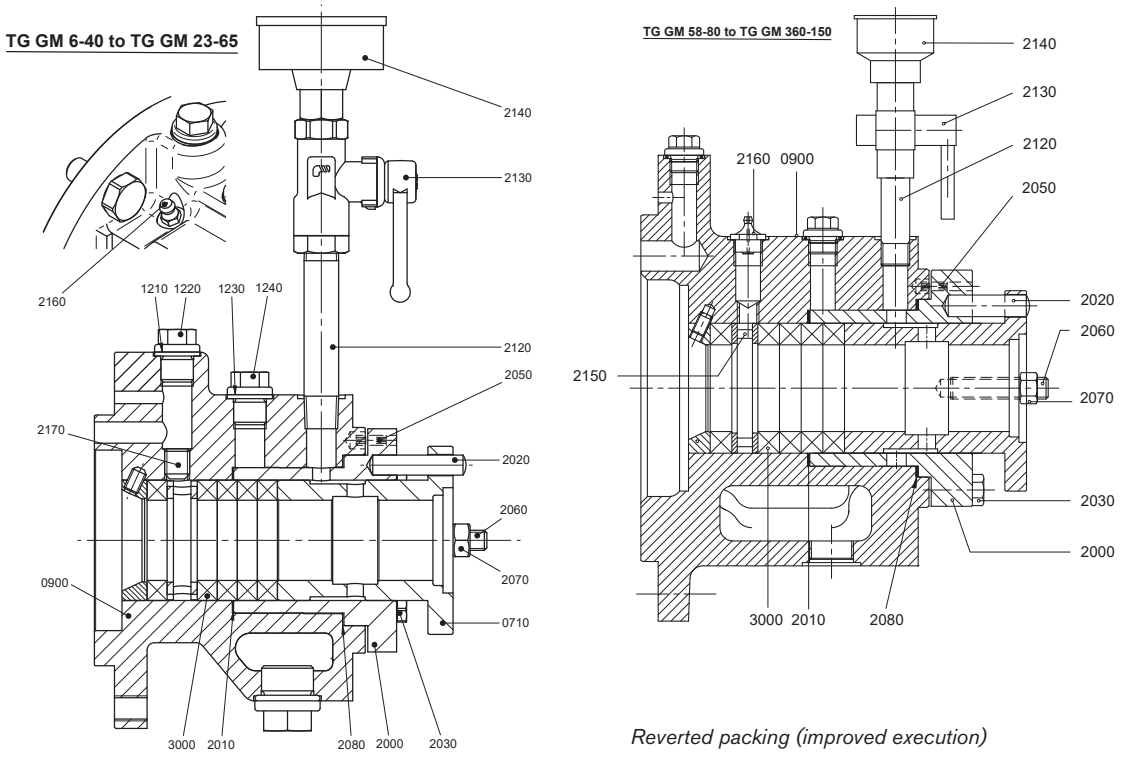

Reverted packing (improved execution)

On this improved execution, the gland packing area can be filled with grease from the outside before the pump is actually started. This prevents the chocolate from entering this area until the packing is properly adjusted. Otherwise, in case chocolate with sugar content is entering the gland packing area, it would caramelize/burn at the inside and the shaft sealing would become immediately un-effective even if the gland is tightened harder afterwards. To allow this pre-lubrication of the gland packing area, we have added a lantern ring with external grease nipple behind the first packing ring. Please note that the lubricant must be food-approved and compatible with the product pumped.

Note! The packing is lightly tightened by hand at the factory. When pumping chocolate, the packing needs to be tightened bit by bit at the initial start-up in order to achieve the utmost minimum of leakage, just enough to lubricate the packing rings. Excessively leaking chocolate can overheat in the packing, causing caramelisation, resulting in extra wear of the packing.

3.17.5 Triple PTFE lip-seal cartridge

As from the first of July 2015, this new shaft sealing option (LCT TV) is available on the TopGear GM and H range. This new shaft sealing option can be used for pumping products with a viscosity of more than 5.000 mPas as alternative for double mechanical seals omitting the need for an expensive pressurized quench system. This option can be used for medium temperatures up to 220 °C and a maximum pressure of 16 bar.

Benefits:

- Cartridge system – easy to assemble
- Independent of sense of rotation
- Low friction and limited dry-running capabilities (long-lasting dry running is not allowed !)
- Lip-seals with outstanding chemical resistance
- No need for pressurized quench system
- Non-clogging in viscous media
- Low pressure quench or low pressure quench with leak detection between 2nd and 3rd lip-seal
- Repair kits available for on-site maintenance

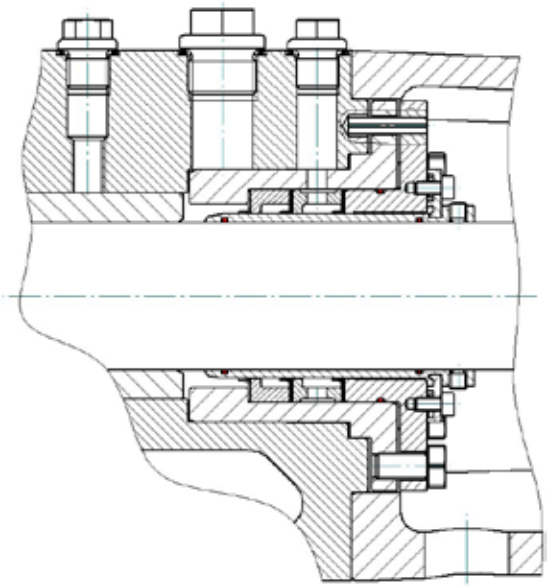

Materials:

- Casing and insert: Duplex steel
- Shaft sleeve: Stainless steel
- Lip seals: GARLOCK Gylon-BLACK (PTFE) - dry run is not allowed.
- O-rings: Fluoroelastomer FKM (Viton)

(*) On request, when the risk of long-lasting dry run cannot be avoided, GARLOCK Gylon-BLUE (PTFE) lips can be used - please contact your SPXFLOW sales representative or the 'commercial engineering department' via FT.COMENG.BE@SPXFLOW.COM.

3.18 Safety relief valve

Example

V 35 - G 10 H
1 2 3 4 5

1. Safety relief valve = V

2. Type indicating = inlet diameter (in mm)

18 Safety relief valve size for
TG GM2-25, TG GM3-32, TG GM6-40

27 Safety relief valve size for
TG GM15-50, TG GM23-65

35 Safety relief valve size for
TG GM58-80

50 Safety relief valve size for
TG GM86-100, TG GM120-100, TG GM185-125

60 Safety relief valve size for
TG GM270-150, TG GM360-150

3. Materials

G Safety relief valve in cast iron *

** for food applications: a cast iron safety relief valve can be used now*

4. Working pressure class

4 Working pressure 1-4 bar

6 Working pressure 3-6 bar

10 Working pressure 5-10 bar

16 Working pressure 9-16 bar

5. Heated spring casing

H Safety relief valve heated spring casing

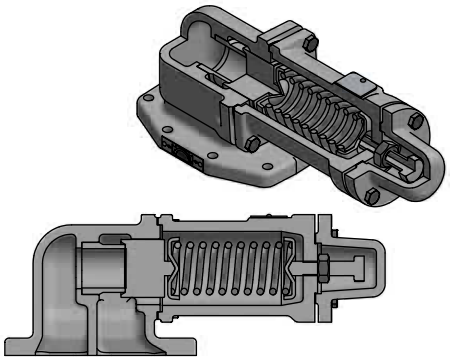

Safety relief valve – horizontal

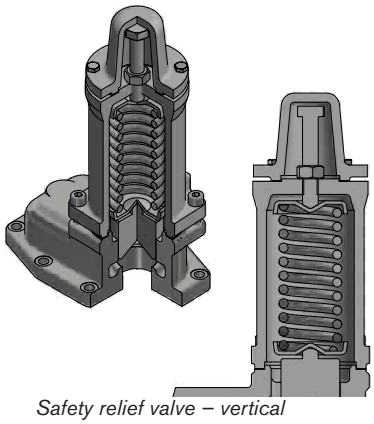

Safety relief valve – vertical

3.18.1 Pressure

Safety relief valves are divided into 4 working pressure classes i.e. 4, 6, 10 and 16 indicating the maximum working pressure for that valve. Each class has a standard set pressure at 1 bar above the indicated maximum working pressure. The set pressure can be set lower on request never higher.

Working pressure class	4	6	10	16
Standard set pressure (bar)	5	7	11	17
Working pressure range (bar)	1 – 4	3 – 6	5 – 10	9 – 16
Set pressure range (bar)	2 – 5	4 – 7	6 – 11	10 – 17

3.18.2 Heating

The weld on jacket is provided with 2 thread connections in S-jacket design.

Maximum temperature: 200°C
Maximum pressure: 10 bar

The weld on jacket is provided with 2 flanged connections in T-jacket design. The flanges have a special shape with welding neck based on PN16 dimensions

Maximum temperature: 300°C
Maximum pressure: 12 bar

3.18.3 Safety relief valve – Relative adjustment

Adjustment of the standard setting pressure is performed at the factory.

Note! *When testing the safety relief valve mounted on the pump, make sure the pressure never exceeds the set pressure of the valve + 2 bar.*

To adjust the standard opening pressure, proceed as follows:

1. Loosen the tap bolts (7310).
2. Remove cover (7050).
3. Take the measurement of dimensions of H.
4. Read spring ratio in the below table and determine the distance over which the adjusting bolt (7320) must be loosened or tightened.

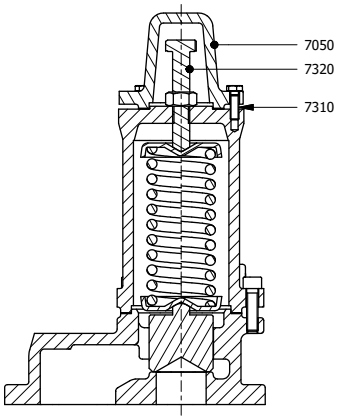

Vertical safety relief valve

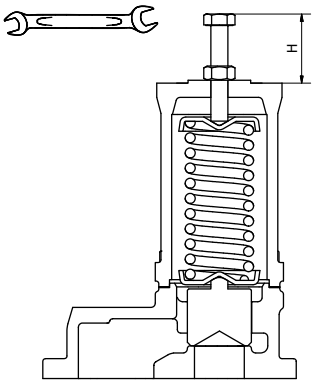

Set pressure modification

Spring ratio – Safety relief valve

TG GM pump size		Spring dimensions						
		Pressure class	Du mm	d mm	Lo mm	p/f bar/mm	ΔH [mm] in order to adjust by 1 bar	
2-25 3-32 6-40	Horizontal	4	25.5	3.0	64	0.26	3.85	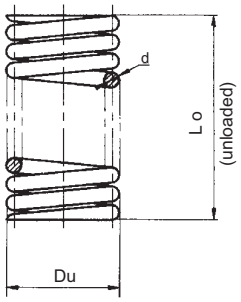
		6	25.5	3.5	66	0.43	2.33	
		10	25.5	4.5	60	1.72	0.58	
		16	25.5	4.5	60	1.72	0.58	
15-50 23-65		4	37.0	4.5	93	0.21	4.76	
		6	37.0	4.5	93	0.21	4.76	
		10	36.5	6.0	90	0.81	1.23	
		16	36.5	6.0	90	0.81	1.23	
58-80	Vertical	4	49.0	7.0	124	0.32	3.13	
		6	49.0	7.0	124	0.32	3.13	
		10	48.6	8.0	124	0.66	1.52	
		16	48.6	8.0	124	0.66	1.52	
86-100 120-100 185-125		4	49.0	7.0	124	0.16	6.25	
		6	48.6	8.0	124	0.33	3.03	
		10	49.0	9.0	120	0.55	1.82	
		16	62	11	109	0.86	1.16	
270-150 360-150		4	82	11	200	0.12	8.33	
		6	82	11	200	0.12	8.33	
		10	84	12	200	0.19	5.26	
		16	88	14	200	0.32	3.13	

Example: adjust the standard set pressure of a V35-G10 valve (for pump size 58-80) to 8 bar.

- ⇨ *Standard set pressure of V35-G10 = 11 bar (see table under 3.18.1)*
- ⇨ *Difference between actual set pressure and desired set pressure = 11 - 8 = 3 bar*
- ⇨ *ΔH to loosen the adjusting bolt = 3 x 1.52 mm (see table above) = 4.56 mm*

Note!

The *spring ratio p/f depends upon the dimensions of the spring. Check these dimensions if necessary (see table above).*

When the safety relief valve is not functioning properly, the pump must immediately be taken out of service. The safety relief valve must be checked by your local distributor.

3.18.4 Sectional drawings and part lists

3.18.4.1 Single safety relief valve

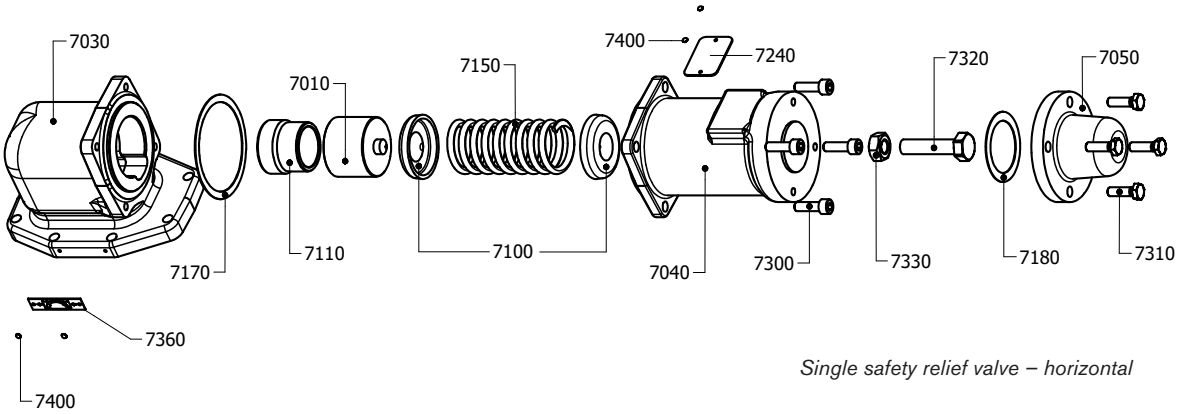

Single safety relief valve – horizontal

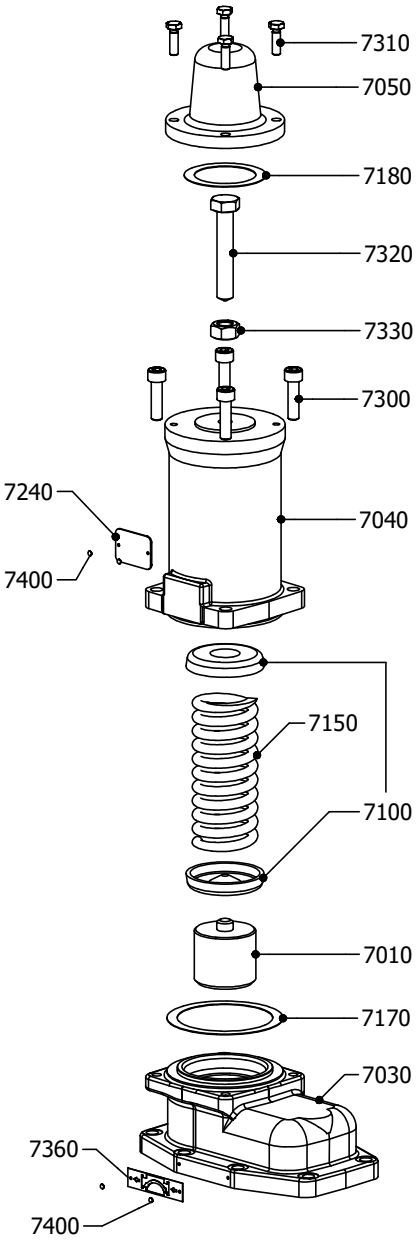

Single safety relief valve – vertical

Pos.	Description	V18	V27	V35	V50	V60	Preventive	Overhaul
7010	Valve	1	1	1	1	1		
7030	Valve casing	1	1	1	1	1		
7040	Spring casing	1	1	1	1	1		
7050	Cover	1	1	1	1	1		
7100	Spring plate	2	2	2	2	2		
7110	Valve seat	1	1	-	-	-		
7150	Spring	1	1	1	1	1		
7170	Flat gasket	1	1	1	1	1	x	x
7180	Flat gasket	1	1	1	1	1	x	x
7240	Name plate	1	1	1	1	1		
7300	allen screw	3	4	4	4	4		
7310	Tap bolt	3	4	4	4	4		
7320	Adjusting screw	1	1	1	1	1		
7330	Hexagonal nut	1	1	1	1	1		
7360	Arrow plate	1	1	1	1	1		
7400	Rivet	4	4	4	4	4		

3.18.4.2 Heated spring casing

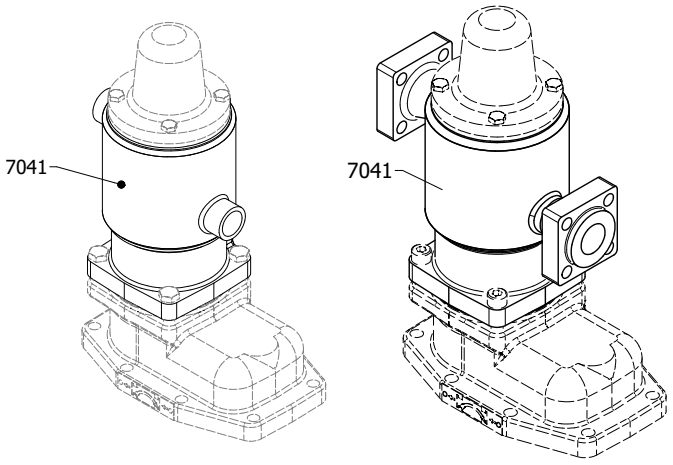

S-jacket (thread connection) T-jacket (flange connection)

Pos.	Description	V18	V27	V35	V50	V60	Preventive	Overhaul
7041	Heated spring casing	N/A	1	1	1	1		

3.18.4.3 Double safety relief valve

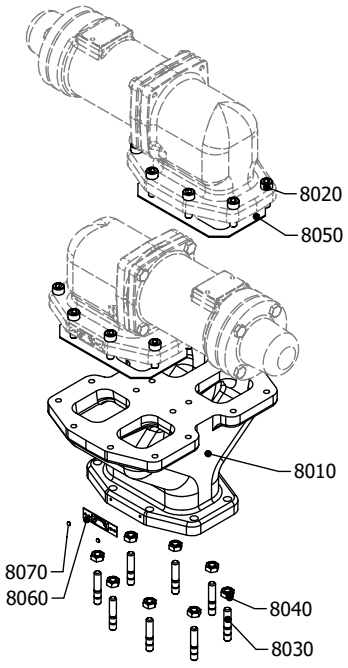

Double safety relief valve – horizontal

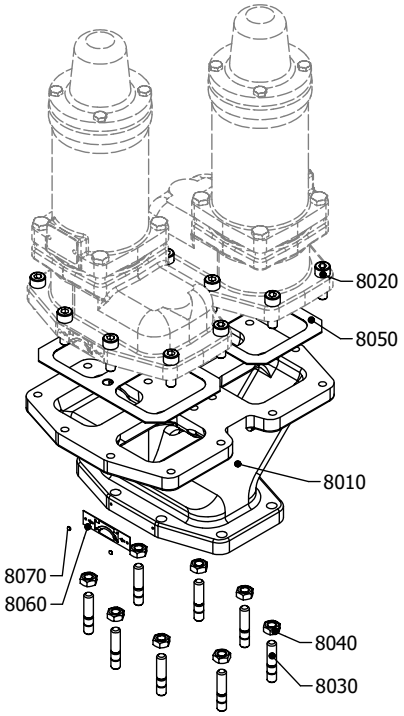

Double safety relief valve – vertical

Pos.	Description	V18	V27	V35	V50	V60	Preventive	Overhaul
8010	Y-casing	N/A	1	1	1	1		
8020	Cylindrical head screw		16	16	16	16		
8030	Stud bolt		8	8	8	8		
8040	Hexagonal nut		8	8	8	8		
8050	Flat gasket		3	3	3	3	x	x
8060	Arrow plate		1	1	1	1		
8070	Rivet		2	2	2	2		

3.19 Installation

3.19.1 General

This manual gives basic instructions which are to be observed during installation of the pump. It is therefore important that this manual is read by the responsible personnel prior to assembly and afterward to be kept available at the installation site.

The instructions contain useful and important information allowing the pump/pump unit to be properly installed. They also contain important information to prevent possible accidents and serious damage prior to commissioning and during operation of the installation.

Non-compliance with the safety instructions may produce a risk to the personnel as well as to the environment and the machine, and results in a loss of any right to claim damages.

It is imperative that signs affixed to the machine, e.g. arrow indicating the direction of rotation or symbols indicating fluid connections be observed and kept legible.

3.19.2 Location

3.19.2.1 Short suction line

Locate the pump/pump unit as close as possible to the liquid source and if possible below the liquid supply level. The better the suction conditions, the better the performance of the pump. See also section 3.19.6.2 Piping.

3.19.2.2 Accessibility

Sufficient room should be left around the pump/pump unit to allow proper inspection, pump isolation and maintenance.

Sufficient space should be left in front of the pump to enable disassembly of the pump cover, idler and idler pin.

- For loosening pump cover refer to **ma**
- For disassembling rotating parts (pump shaft and sealing) refer to **mb**
- To adjust pressure of safety relief valve refer to **mc**

For dimensions of ma, mb, mc see chapter 6.0.

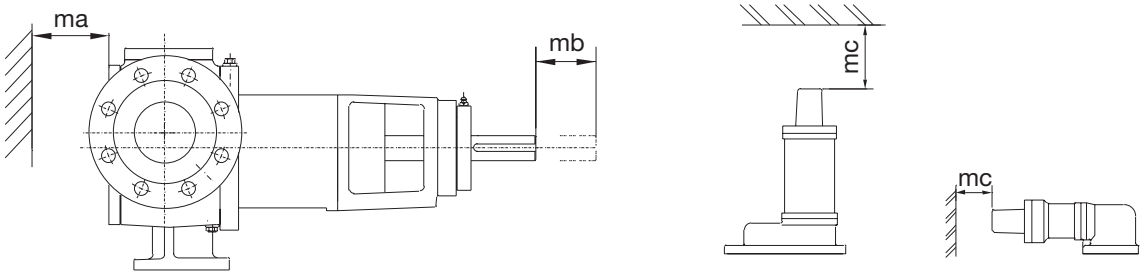

It is imperative that the operating device of pump and/or pump unit is always accessible (also during operation).

3.19.2.3 Outdoor installation

The TopGear pump may be installed in the open, the ball-bearings are sealed by rubber V-joints protecting the pump against dripping water. In very wet conditions we advice to install a roof.

3.19.2.4 Indoor installation

Locate the pump so that the motor can be vented properly. Prepare the motor for operation according to instructions provided by the motor manufacturer.

When flammable or explosive products are pumped, a proper earthing should be provided. The components of the unit should be connected with earthing bridges to reduce the danger arising from static electricity.
Use explosion free or explosion proof motors according to local regulations. Provide suitable coupling guards and suitable couplings.

Excessive temperatures
Depending on the fluid being pumped, high temperatures may be reached inside and around the pump. From 60°C onwards the responsible person must provide the necessary protective means and place “Hot surfaces” notices .

When insulating the pump unit, ensure that adequate cooling is allowed from the bearing housing. This is required for cooling of the bearings and grease of the bearing bracket
(see 3.19.9.7 Guarding of moving parts).

Protect the user against leakages and possible liquid streams.

3.19.2.5 Stability

Foundation
The pump unit must be installed on a base plate or on a frame placed exactly level on the foundation. The foundation must be hard, level, flat, vibration-free to guarantee correct alignment of the pump/drive while operating. See also section 3.19.9 Guidelines for assembly and section 3.19.9.6 Shaft coupling.

Horizontal mounting
Pumps are to be mounted horizontally on the integral feet. Other kinds of installation have an influence on draining, filling and functioning of the mechanical seal, etc. If the pump/pump unit is installed differently, contact your local distributor.

Support
Nevertheless the feet underneath the pump casing make the pump very stable, an extra support is placed under the bearing bracket. Especially when driven by V-belt and/or a combustion engine this extra support close to the coupling is needed. It is designed to absorb the belt forces and vibrations whilst letting the pump shaft expand freely along its axis.

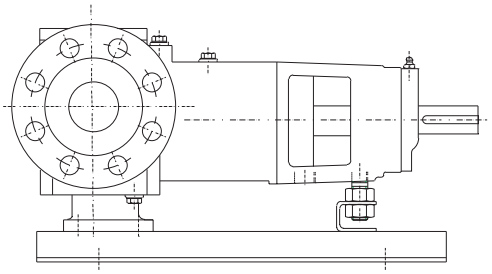

3.19.3 Drives

If a bare shaft pump is supplied, the user is responsible for the drive and the assembling with the pump. The user also must provide guarding of moving parts. See also section 3.19.9 Guidelines for assembly.

3.19.3.1 Starting torque

- The starting torque of internal gear pumps is almost identical to the nominal torque.
- Take care that the motor has a sufficiently large starting torque. Therefore choose a motor with a capacity 25% higher than the pump power consumption.

Note! *A mechanical variable speed drive requires checking of the available torque at low and high speed.*

- Frequency invertors may have limited the starting torques.
- Also verify that the maximum allowable torque at the pump shaft is not exceeded (see section 3.11.4). In critical cases a torque limiting device such as a slip or break coupling can be provided.

3.19.3.2 Radial load on shaft end

The shaft end of the pump shaft may be loaded in radial sense with the maximum radial force (Fr). See table.

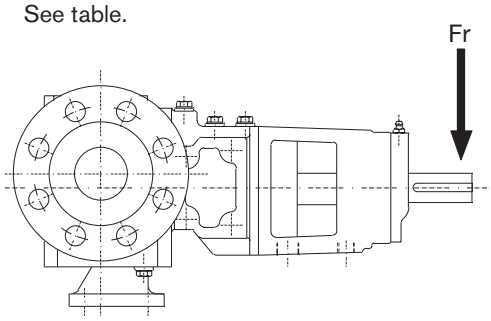

TG GM pump size	Fr (N) - max
2-25/3-32	400
6-40	700
15-50/23-65	1000
58-80/86-100/120-100	2000
185-125	3000
270-150	3000
360-150	6000

- This force is calculated on the maximum allowable torque and the maximum allowable working pressure of the pump.
- In case a direct drive with a flexible coupling is used, the indicated force will not be exceeded when pump and drive are well aligned.
- Starting with the TG GM15-50, V-belt drive can be used.

In case of V-belt drive

The maximum allowable radial force Fr as indicated in the table may be chosen higher but must be calculated case by case in function of pressure, torque and size of the pulley. Consult your local distributor for advice.

3.19.4 Shaft rotation for pump without safety relief valve

The shaft rotation determines which port of the pump is suction and which is discharge.
The relation between the shaft rotation and the suction/discharge side is indicated by the rotation arrow plate attached at the top cover of a pump without safety relief valve.

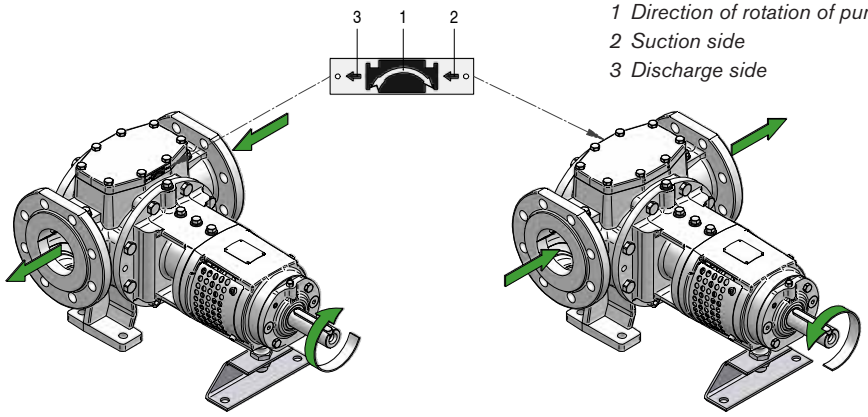

1 Direction of rotation of pump shaft
2 Suction side
3 Discharge side

Note! *Shaft rotation is always viewed from the shaft end towards the pump.*
Unless otherwise specified on the order, TopGear pumps are built at the factory for clockwise rotation (left figure above), which we define as the standard direction of rotation.

The small arrows 2 and 3 indicate the flow direction of the pumped liquid.
Always make sure that shaft rotation corresponds with the position of the discharge and suction ports and the direction indicated by the rotation arrow plate.

If the shaft rotation is correct in relation to the port position but different from the direction indicated by rotation arrow plate, the top cover must be disassembled and turned around by 180°. The two suck-back grooves will help to evacuate air or gases during start-up or whilst running. As they only function in one direction of rotation, the top cover should be positioned in such a way that the suck-back grooves are placed towards the suction side.In case of doubt, contact your local distributor.

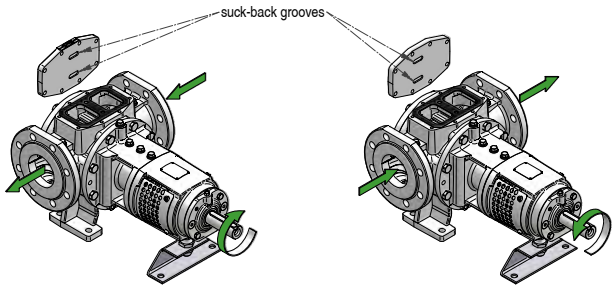

If the pump rotates in both directions, the top cover should be positioned in such a way that the suck-back grooves are placed towards the most used suction side.

3.19.5 Shaft rotation for pump with safety relief valve

The shaft rotation determines which port of the pump is suction and which is discharge.
The relation between the shaft rotation and the suction/discharge side is indicated by the rotation arrow plate attached at the valve casing of the safety relief valve.

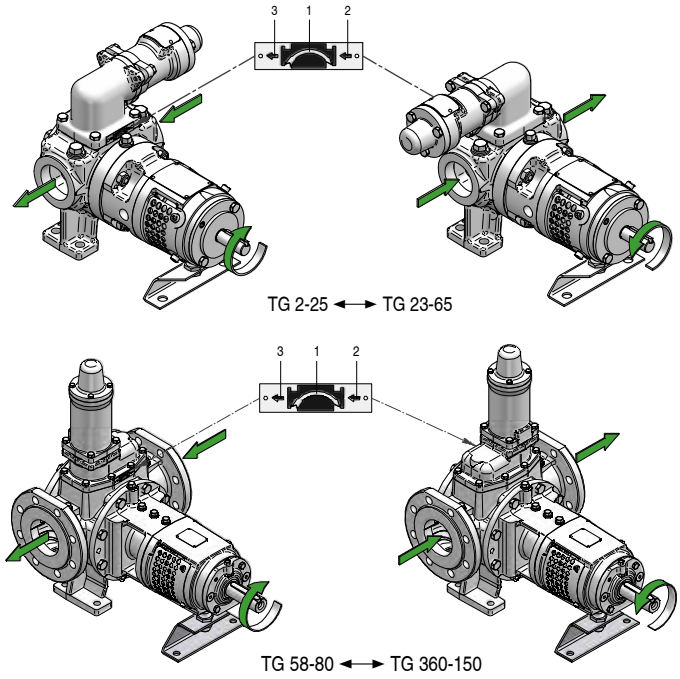

1 Direction of rotation of pump shaft
2 Suction side
3 Discharge side

Note! *Shaft rotation is always viewed from the shaft end towards the pump.*
Unless otherwise specified on the order, TopGear pumps are built at the factory for clockwise rotation (left figures above), which we define as the standard direction of rotation.

The small arrows 2 and 3 indicate the flow direction of the pumped liquid.
Always make sure that shaft rotation corresponds with the position of the discharge and suction ports and the direction indicated by the rotation arrow plate.

If the shaft rotation is correct in relation to the port position but different from the direction indicated by rotation arrow plate, the safety relief valve must be disassembled and turned around by 180°.

If the pump rotates in both directions, a double safety relief valve is required.

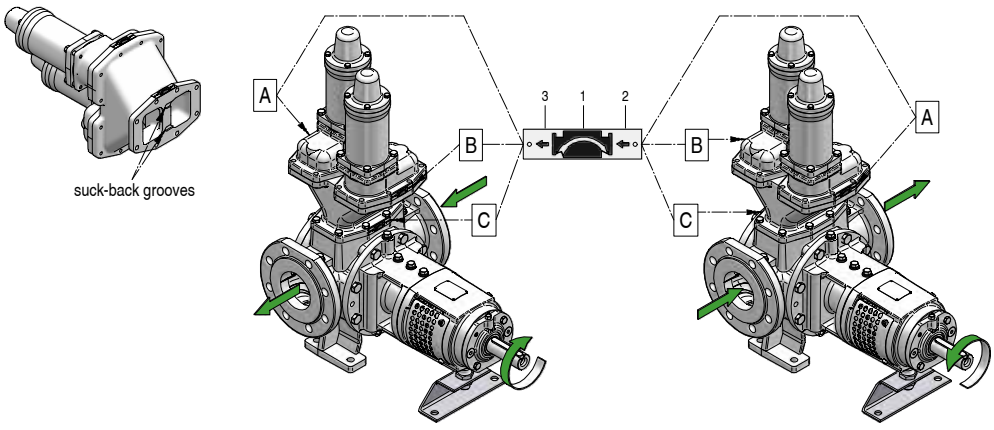

When a double safety relief valve is installed three arrow plates are attached – one on each valve (A and B) indicating the liquid flow direction of each valve (small arrows 2 and 3) and one on the Y-casing (C) indicating the most favourable direction of rotation of the pump (arrow 1).

The two suck-back grooves will help to evacuate air or gases during start-up or whilst running. As they only function in one direction of rotation, the Y-casing should be positioned in such a way that the suck-back grooves are placed towards the most used suction side.
In case of doubt, contact your local distributor.

Be sure that the safety relief valves are mounted opposite each other so that the arrow plates on the safety relief valves (A and B) are indicating opposite liquid flow directions.

3.19.6 Suction and discharge pipes

3.19.6.1 Forces and moments

Note! *Excessive forces and moments on the nozzle flanges derived from piping can cause mechanical damage to pump or pump unit.*
Pipes should therefore be connected in line, limiting the forces on the pump connections.
Support the pipes and make sure they remain stress-free during operation of the pump.

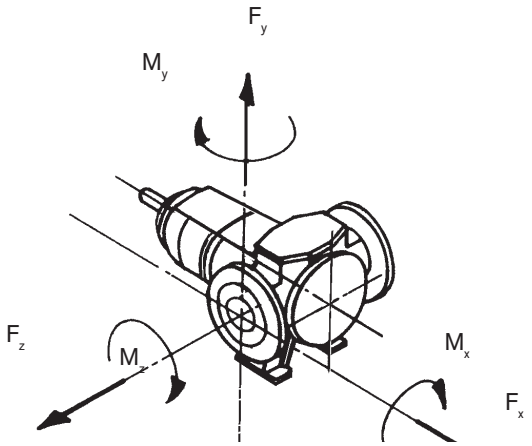

TG GM pump size	$F_{x, y, z}$ (N)	$M_{x, y, z}$ (Nm)
2-25	2000	315
3-32	2050	325
6-40	2200	385
15-50	2600	675
23-65	2900	800
58-80	3550	1375
86-100	4100	1750
120-100	4100	1750
185-125	5900	3750
270-150	10600	7150
360-150	10600	7150

See table for maximum allowable forces ($F_{x, y, z}$) and moments ($M_{x, y, z}$) on the nozzle flanges *with pump on a solid foundation (e.g. grouted base plate or solid frame).*

When pumping hot liquids attention should be given to forces and moments caused by thermal expansion in which case expansion joints should be installed.

Check after connecting whether the shaft can move freely.

3.19.6.2 Piping

- Use piping with an equal diameter than the connection ports of the pump and shortest possible.
- The pipe diameter has to be calculated in function of the liquid parameters and the installation parameters. If necessary use larger diameters to limit pressure losses.
- If the fluid to be pumped is viscous, pressure losses in the suction and discharge lines may increase considerably. Other piping components like valves, elbows, strainers, filters and foot valve also cause pressure losses.
- Diameters, length of piping and other components should be selected in such a way that the pump will operate without causing mechanical damage to the pump/pump unit, taking into account the minimum required inlet pressure, the maximum allowable working pressure and the installed motor power and torque.
- Check the tightness of the pipes after connection.

Suction piping

- Liquids should preferably enter the pump from a level higher than the pump level. In case the liquid should be sucked from a level lower than the pump level, the inclining suction pipe should rise upwards towards the pump without any air pockets.
- A too small diameter or a too long suction pipe, a too small or blocked strainer will increase pressure losses so that the NPSHa (NPSH available) becomes smaller than the NPSH (NPSH required).

  Cavitation will occur, causing noise and vibrations. Mechanical damage to pump and pump unit is not excluded.
- When a suction strainer or filter is installed pressure losses in the suction line must be checked constantly. Also check if the inlet pressure at the suction flange of the pump is still sufficiently high.
- When the pump works in both directions, pressure losses must be calculated for both directions.

Self-priming operation

At the start sufficient liquid must be available in the pump filling up the internal clearance volume and the dead spaces, allowing the pump to build up a pressure difference.

Therefore, for pumping low viscosity fluids, a foot valve with the same or larger diameter than the suction pipe must be installed or the pump can be installed without foot-valve but in U-line.

Note! *A foot valve is not recommended when pumping high viscous liquids.*

- To remove air and gases from suction line and pump, counter pressure at the discharge side must be reduced. In case of self-priming operation, start-up of the pump should be performed with open and empty discharge line allowing air or gases to escape at low back pressure.
- Another possibility in case of long lines or when a non-return valve is installed in the discharge line, is to install a by-pass with isolating valve close to the discharge side of the pump. This valve will be opened in case of priming and allows air or gas evacuation at low back pressure.
  The bypass should be lead back to the supply tank – not to the suction port.

3.19.6.3 Isolating valves

To allow proper maintenance it is necessary to be able to isolate the pump. Isolation can be done by installing valves in suction and discharge lines.

- These valves must have a cylindrical passage of the same diameter of the piping (full bore). (Gate or ball valves are preferable).
- When operating the pump, the valves must be opened completely. The output must never be regulated by means of closing valves in suction or discharge pipes.
  It must be regulated by changing shaft speed or by re-routing the media over a by-pass back to the supply tank.

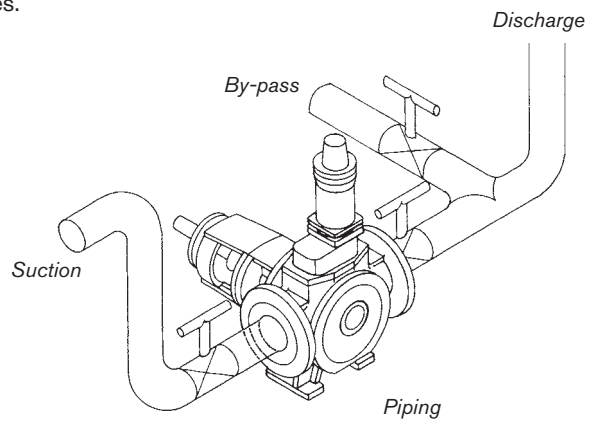

3.19.6.4 Strainer

Foreign particles can seriously damage the pump. Avoid the entry of these particles by installing a strainer.

- When selecting the strainer attention should be given to the size of the openings so that pressure losses are minimised. The cross-sectional area of the strainer must be three times that of the suction pipe.
- Install the strainer in such a way that maintenance and cleaning are possible.
- Make sure that the pressure drop in the strainer is calculated with the right viscosity. Heat the strainer if necessary to reduce viscosity and pressure drop.

For the maximum allowable particle size see section 3.16.

3.19.7 Secondary piping

For dimensions of connections and plugs see chapter 6.0.

3.19.7.1 Drain lines

The pump is provided with drain plugs.

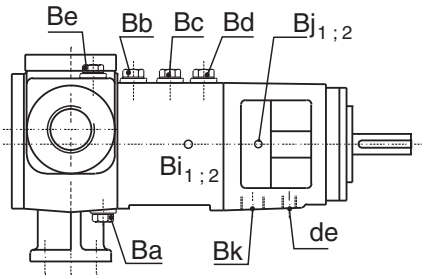

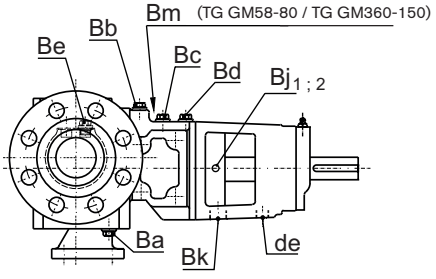

3.19.7.2 Heating jackets

1. S-type jackets

The S-jackets are designed for use with saturated steam (max 10 bar ⇒ 180°C) or with non-dangerous media (max 10 bar - max 200°C). They are provided with threaded connections Bl (see chapter 6.0 for the dimensions).

The connection can be done by threaded pipes or pipe connections with sealing in the thread (conical thread applying ISO 7/1) or sealed outside the thread by means of flat gaskets (cylindrical thread applying ISO 228/1). Thread type see section 3.22.7.

S-jacket on pump cover

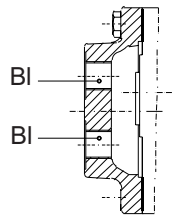

GM2-25/GM3-32

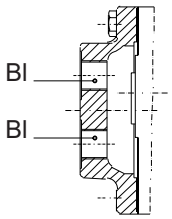

GM6-40/GM23-65

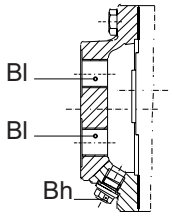

GM58-80/GM360-150

S-jacket around shaft area

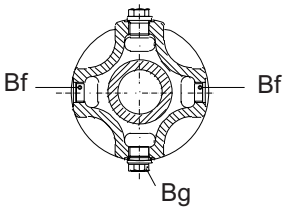

GM2-25/GM3-32

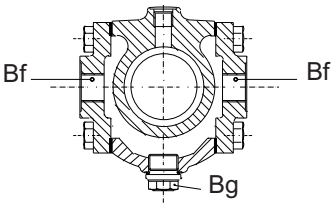

GM6-40/GM23-65

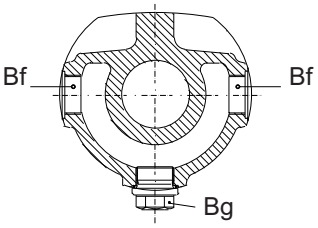

GM58-80/GM360-150

2. T-type jackets

The T-jackets are provided with special steel flanges (delivered with the pump) on which the pipes should be welded properly by qualified personnel. The jackets are made of nodular iron or other ductile material. **For pipe dimensions of Cf see chapter 6.0.**

T-jacket on pump cover

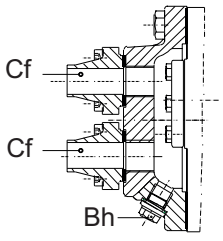

GM6-40 to GM360-150

T-jacket around shaft area

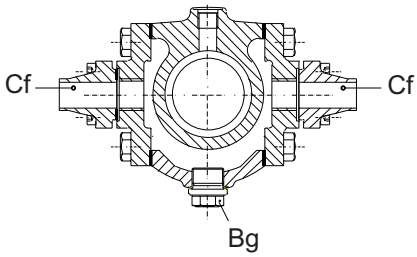

GM6-40 to GM360-150

3. Jacket on pump cover

In case of steam supply, connect the supply line at the highest position and the return line to the lowest position so that condensed water will be drained via the lowest line. In case of liquid supply, the positions are not important. A drain plug Bh is provided and can be considered as a drain line (TG GM58-80 to TG GM360-150).

4. Jacket around the shaft seal

Connect the supply and the return line to both connections on the intermediate casing. A drain plug is provided in the intermediate casing at the bottom side (Bg). In case of steam supply this drain can be connected to a drain line to evacuate condensed water.

Note! *After connection check the tightness of the heating circuit and vent it properly.*

5. Jackets on safety relief valve – around spring casing

S-jackets on the safety relief valve are designed for use with saturated steam (max 10 bar, max 180°C) or with non-dangerous media (max 10 bar, max 200°C). They are provided with threaded connections Bo (see chapter 6.0 for dimensions). The connection can be done with threaded pipes or pipe connections with sealing in the thread (conical thread applying ISO 7/1). Thread type see section 3.22.7.

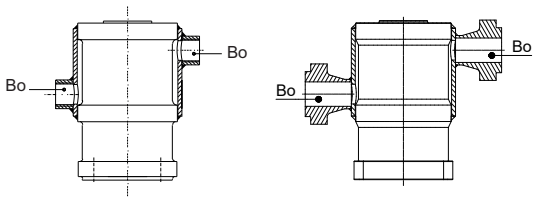

T-jackets are designed for use with thermal oil and apply to the DIN4754 safety standard for thermal oil transfer. T-jackets could also be used for over heated steam or more dangerous media (max 12 bar, max 300°C). T-jackets are provided with special steel flanges (delivered with the pump) with connections Bo (see chapter 6.0 for dimensions) on which the pipes should be welded properly by qualified personnel

In case of steam supply, connect the supply line at the highest position and the return line to the lowest position so that condensed water will be drained via the lowest line. In case of liquid supply, the positions are not important.

3.19.8 Flush/quench media

When the shaft sealing needs flushing or quenching, it is the responsibility of the user to select the appropriate media and to provide the necessary piping and accessories (valves, etc.) which are necessary to ensure a proper functioning of shaft seal.

When installing a flush or quench circuit always use the lowest connection as inlet and the highest one as outlet (in case of two side connection). This will facilitate the evacuation of air or gases if any.

Flush/Quench media selection

Attention should be given to the compatibility of the pumped liquid with the flush/quench media. Choose the sealing liquid so that unwanted chemical reactions are avoided. Also check the chemical resistance and the maximum allowable temperature of the materials of construction and the elastomers. In case of doubt, contact your local distributor.

3.19.8.1 Packing

Shaft gland packing can be quenched using one connection or flushed using two connections via the lantern ring of the stuffing box.

One quenched connection

Quench media is fed to one connection when:

- In the case of a self-priming pump air suction through the packing (3000) has to be avoided or when packing rings need lubrication in order to avoid running-dry. Connect the lantern ring (2020) to the discharge flange or to another liquid via **Bd** or Bi.

GM2-25/ GM3-32

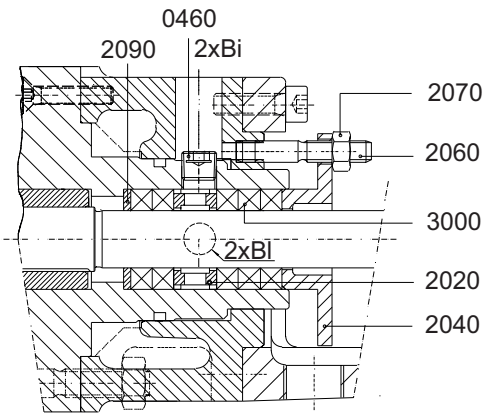

GM6-40/GM360-150

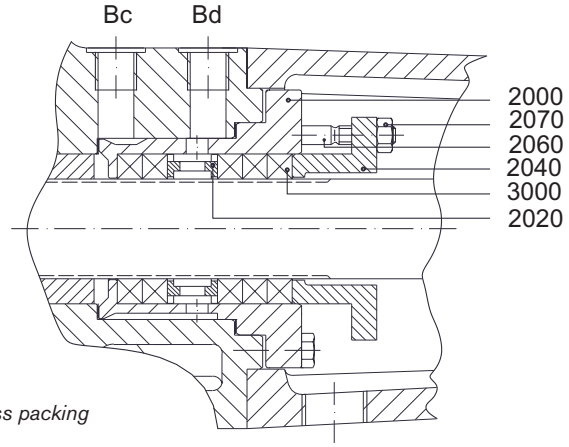

Connection fluid circuit across packing

- When at a high discharge pressure packing (3000) must be relieved. Connect the suction flange via **Bd** or Bi.
  Be sure the pressure in the lanternring area is above atmosphere pressure to avoid air sucking through the last packing rings which makes the packing running dry.
- The pumped liquid must be quenched to avoid contact with the atmosphere (when this liquid is corrosive or poisonous) or when build up of residues of abrasive liquids against the packing must be avoided.
  Connect a clean, different liquid (e.g. water) via Bd or Bi at a pressure which is higher than the pressure existing before the packing.
  A slight quantity of this liquid will leak into the process liquid.

Two flushed connections
Flushing media requires two connections to provide in and out. This arrangement is used:

- To drain leaking or to cool or heat packing (3000). Connect inlet with **Bc** or Bi and outlet with **Bd** or Bj. Both pumped liquid and another media can be used as flush media.

3.19.8.2 Single Mechanical seal

To guarantee lubrication and cooling of the sliding faces, let a media circulate along the mechanical seal. Proceed as follows:

One connection point
- Connect suction or discharge flange with connection **Bd** or Bi.

Two connection points
- Connect discharge flange with connection **Bd** or Bi and suction flange with connection **Bc**.
- Provide piping with accessories to reduce flow.
- In case of either one or two connection points, **Bc** can be used as filling and air release plug.

GM2-25/GM3-32

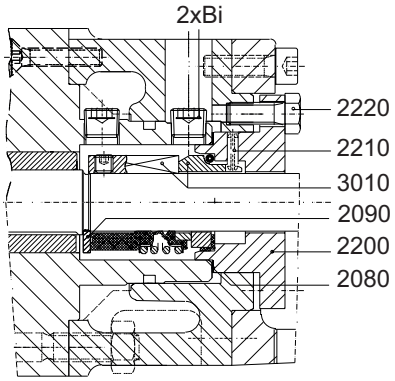

GM6-40/GM360-150

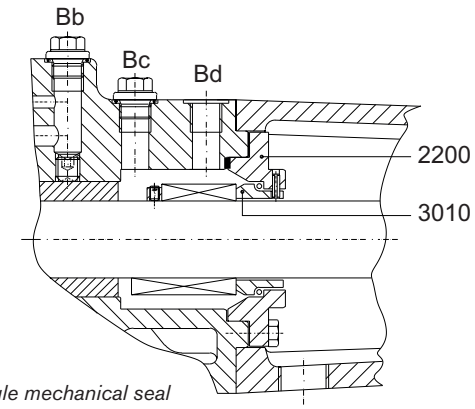

Connection fluid circuit across single mechanical seal

3.19.8.3 Double mechanical seal – Tandem arrangement

For lubrication and cooling of the sliding faces at liquid side of this shaft sealing, proceed as described in section “single mechanical seal”.

Provide via Bj the supply of a media quenching the mechanical seal at atmosphere side. Install the quench media reservoir at a height of maximum 1 metre above the pump and let the media circulate without pressure or at least without overpressure. Supply from an open tank will do thanks to the Thermo siphon principle.

Pressure of the quench media must be reduced in order to avoid the mechanical seal from being pushed open.

For other possibilities of connection, refer to section 3.19.8.6 Secondary connections.

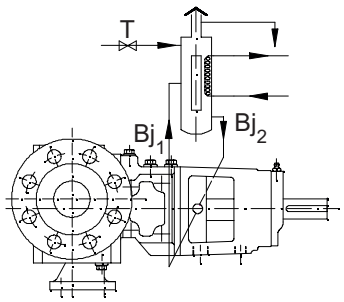

Circulation of flush media without pressure (GG)

3.19.8.4 Double mechanical seal – Back-to-back arrangement

- Use connection **Bd** or Bi as the outlet of quench media and one of the connections Bj as the inlet.
- Use connection Bc as filling and air release plug (this is not possible with GM2-25/GM3-32 and with jackets around the shaft seal area).
- Let the media circulate between the sliding faces (B) at 1-2 bar overpressure with regard to the pressure in the sealing space at pump side (A).
  Under normal circumstances the pressure in the sealing space (A) is equal to the suction pressure plus half the differential pressure (Δp).

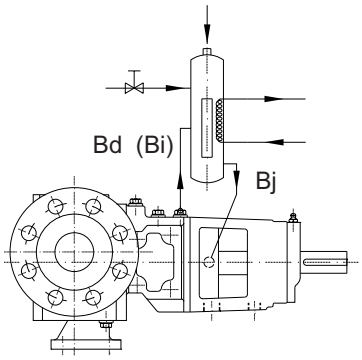

Locking ring
At the first mechanical seal (liquid side) an axial locking ring can be mounted (also consult section 4.7.7.3 of EN12756 (DIN24960).

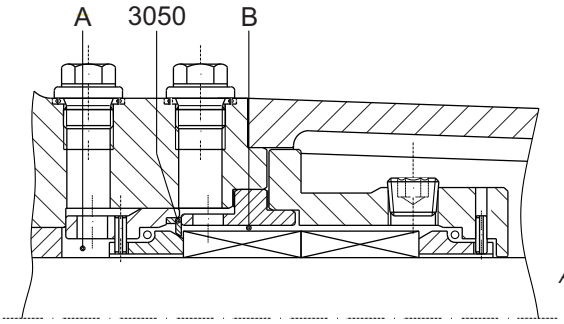

Axial locking ring at the first mechanical seal

This locking ring prevents the static part of the mechanical seal from being pushed out of its seat in case quench pressure (B) falls back or drops out.

This locking ring must be adapted to the static ring and must be delivered together with the mechanical seal.

Some mechanical seals are designed in such a way that the stationary ring can not be pushed out of its seat. In that case, there's no need to fit a locking ring.

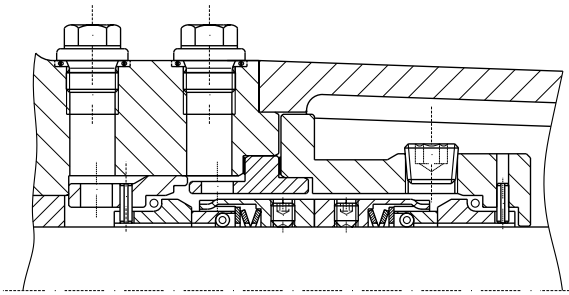

Design double mechanical seal without locking ring

3.19.8.5 Cartridge mechanical seal

The cartridge mechanical seal can be delivered in several configurations;

- Single mechanical seal with trottle bush (leack control or steam quench) (GCT)
- Single mechanical seal with lipseal (liquid quench)(GCQ)
- Double seal arrangements (GCD)
- Triple lip-seal (LCT TV / LCT XX): low pressure quench or low pressure quench with leak detection between 2rd and 3rd lip-seal

3.19.8.6 Secondary connections

Several connection types for circulation, quench or flush on shaft sealing are possible in accordance to ISO-code or to API-plan.

Overview possible configurations for shaft seal circulation, quench and flushing.

Shaft sealing	ISO 5199 code	API 610 plan
PQ	02,03,04,05,06,07,08,09,10,11,12,13	2,11,12,13,21,22,23,31,32,41,51,52,53,54,61,62
GS	02,03,04,05,06,07,08	2,11,12,13,21,22,23,31,32,41
GG, GCT, GCQ, GCD-tandem	02,03,04,05,06,07,08,09,10,13	2,11,12,13,21,22,23,31,32,41,51,52,61,62
GD,GCD	08,09,11,12,13	51,53,54,62

Examples:

API plan 02/ ISO code 00 – Circulation not provided - but possible
Connections are plugged and can be used for possible future venting of the shaft sealing space or to connect circulation or flushing. This configuration is standard in TopGear GM-range.

PQ

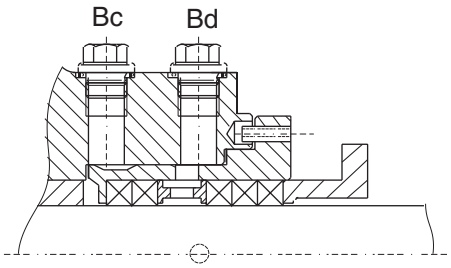

2xBi (TG GM2-25/3-32)

GS

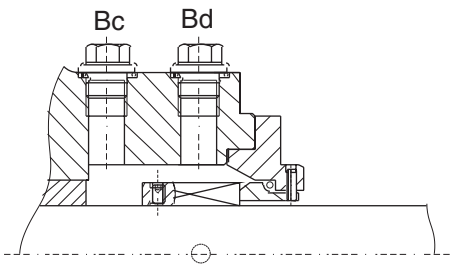

2xBi (TG GM2-25/3-32)

API plans 11, 13, 21/ ISO codes 02, 03, 06, 07 – Circulation pumped liquid
Recirculation of the pumped product through an orifice either from the pump discharge to the shaft seal chamber or from the shaft seal chamber to the pump suction side. The fluid returns internally. Some restriction is needed to reduce capacity.

For viscous pumped liquid it is favourable for easy evacuating of air to connect the seal chamber to the pump suction provided the suction pressure is near or above atmospheric pressure and there is no danger that air is sucked through the seal.

PQ

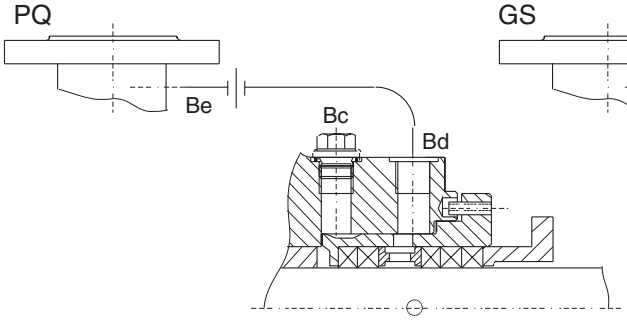

2xBi (TG GM2-25/3-32)

GS

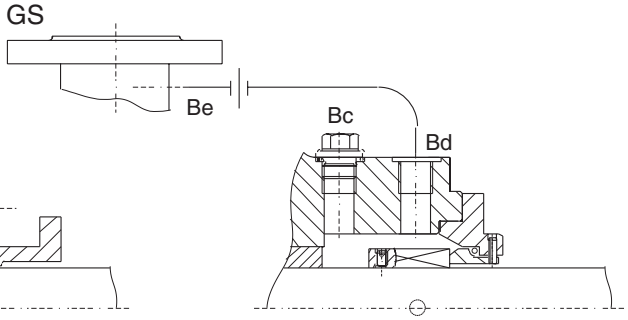

2xBi (TG GM2-25/3-32)

API plans 12, 22, 31, 32, 41/ ISO codes 04, 05, 08, 09 – Clean flush
A flow of clean fluid to the seal chamber. The fluid can be either pumped fluid recirculating through a strainer or cyclone separator and orifice, or a clean compatible fluid injected from an external source. This media comes into contact with the pumped liquid, so it must be compatible with it.

PQ

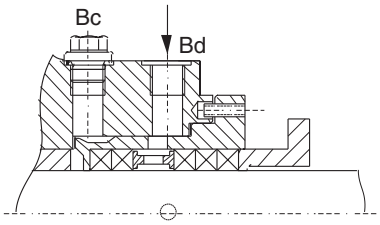

2xBi (TG GM2-25/3-32)

GS

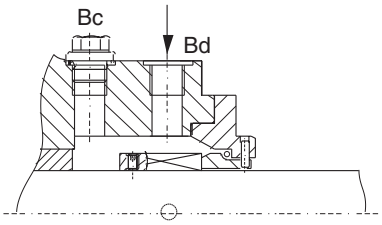

2xBi (TG GM2-25/3-32)

Pressurised barrier (double seal)

A pressurised barrier fluid from an external reservoir or circuit is connected to the shaft seal chamber. The barrier fluid must be clean and compatible with the fluid being pumped.

API plans 53, 54/ ISO codes 09, 11, 12
Circulating quench

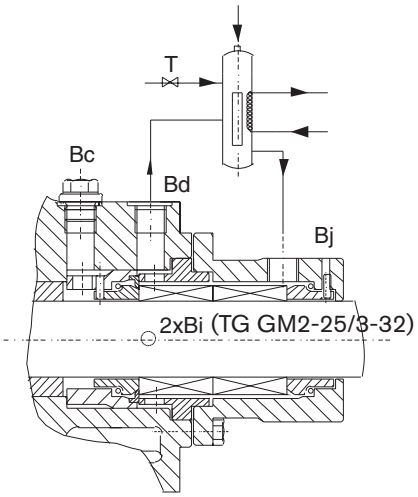

API plans 51, 62/ ISO codes 08, 13
Non-circulating quench

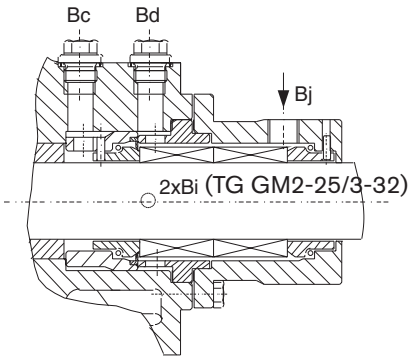

API plan 61/ ISO code 03 – Leakage check and containment
(Single cartridge mechanical seal Cartex TN3 GCT)
In case the seal chamber is not connected, it serves as a seal leakage control (leakage through the first shaft seal). The seal chamber can be connected to a pipe which drains the leakage. Because risks of dry running the arrangement is only adviced for single mechanical cartridge seal.

API plans 51, 62/ ISO codes 08, 09, 13, 03 – Static quench
(Double mechanical seal tandem GG, Single cartridge mechanical seal Cartex TN3 GCT, Single Cartridge mechanical seal Cartex QN3 GCQ, Double cartridge mechanical seal Cartex DN3 GCD)
A clean, non-pressurised quench medium (liquid or steam) flowing from an external source can be connected.

API plan 52/ ISO codes 10, 03 – Circulating quench
A non-pressuresid barrier fluid is connected, flowing from an external source and circulating between both shaft seals.

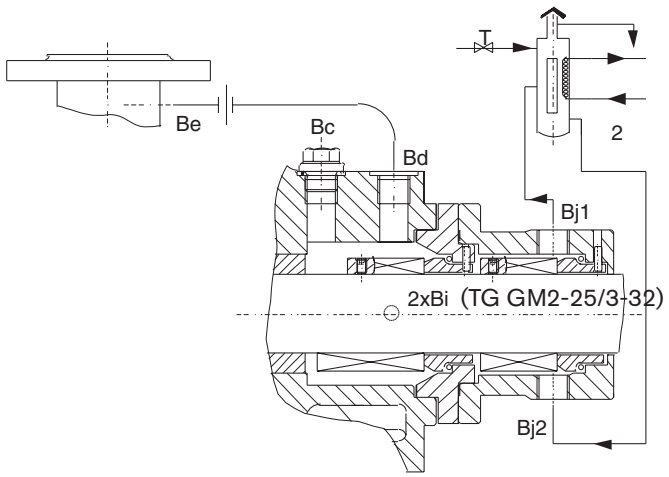

3.19.9 Guidelines for assembly

When a bare shaft pump is delivered, the assembly with drive is the responsibility of the user. The user also must provide all necessary devices and equipment allowing a safe installation and commissioning of the pump.

3.19.9.1 Transport of pump unit

- Prior to lifting and transporting a pump unit, make sure that the packaging is of sturdy enough construction is and will not be damaged during transport.
- Use crane hooks in the baseplate or the frame. (See chapter 1.0.)

3.19.9.2 Foundation pump unit

The pump unit must be installed on a base plate or on a frame placed exactly level on the foundation. The foundation must be hard, level, flat and vibration free in order to guarantee the alignment of pump/drive while operating. (See section 3.19.2.5)

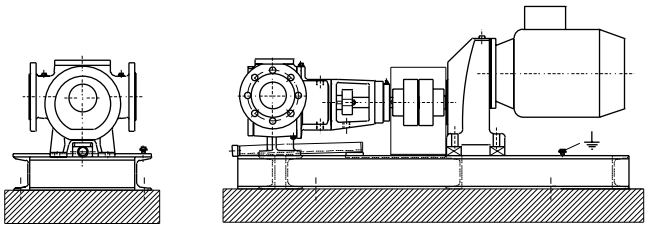

3.19.9.3 Variators, Gear box, Gear motors, Motors

Consult the supplier's instruction manual , included with the delivery.
Contact the pump supplier if the manual is not included.

3.19.9.4 Electric motor drive

- Before connecting an electric motor to the mains check the current local regulations of your electricity provider as well as the EN 60204-1 standard.
- Leave the connecting of electric motors to qualified personnel. Take the necessary measures to prevent damage to electrical connections and wiring.

Circuit breaker
For safety work on a pump unit, install a circuit breaker as close as possible to the machine. It also is advisable to place an earth leakage switch. The switching equipment must comply with current regulations, as stipulated by EN 60204-1.

Motor overload protection
To protect the motor against overloads and short-circuits a thermal or thermo-magnetic circuit breaker must be incorporated. Adjust the switch for the nominal current absorbed by the motor.

Connection
- Do not use a star-delta circuit with electric motors due to the required high starting torque.
- For single-phase alternating current, use motors with a "reinforced" starting torque.
- Ensure a sufficiently high starting torque for frequency-controlled motors and adequate cooling of the motor at low speeds. If necessary, install a motor with forced ventilation.

Electrical equipment, terminals and components of control systems may still carry live current when at rest. Contact with these may be fatal, resulting in serious injury or cause irreparable material damage.

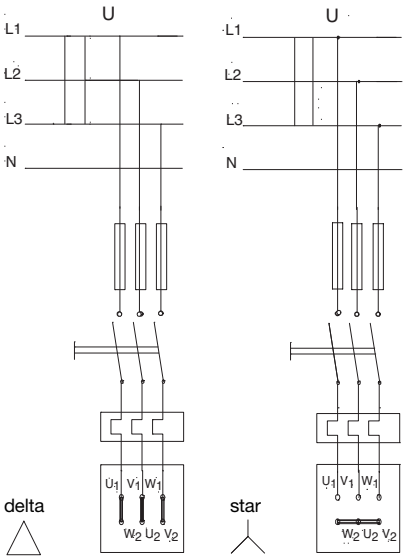

Line	Motor	
U (volt)	230/400 V	400 V
3 x 230 V	delta	–
3 x 400 V	star	delta

3.19.9.5 Combustion engines

When using a combustion engine in the pump unit, see the engine instruction manual included in the delivery. Contact the pump supplier if the manual is not included.
Irrespective of this manual the following must be respected for all combustion engines:

- Compliance with local safety regulations
- The exhaust of combustion gases must be screened to avoid contact
- The starter must be uncoupled automatically once the engine has started
- The pre-set maximum number of engine revolutions may not be modified
- Before starting the engine, the oil level must be checked

Note!

- Never run the engine in a closed area
- Never refuel the engine while it is still running

3.19.9.6 Shaft coupling

Internal gear pumps demand a relatively high starting torque. During the operation shock loads are occurring due to pulsations inherent to the gear pump principle. Therefore, choose a coupling which is 1.5 times the torque recommended for normal constant load.

Fit – **without impact tool** – both halves of the coupling to the pump shaft and the motor shaft respectively.

Alignment
The pump and motor shafts of complete units are accurately pre-aligned in the factory.
After installation of the pump unit, the pump and motor shaft alignment must be checked and re-aligned if necessary.

Alignment of the coupling halves may only take place by moving the electric motor!

1 Place a ruler (A) on the coupling. Remove or add as many shims as is necessary to bring the electric motor to the correct height so that the straight edge touches both coupling halves over the entire length, see figure.

2 Repeat the same check on both sides of the coupling at the height of the shaft. Move the electric motor so that the straight edge touches both coupling halves over the entire length.

3 To be certain the check is also undertaken using external callipers (B) at 2 corresponding points on the sides of the coupling halves, see figure.

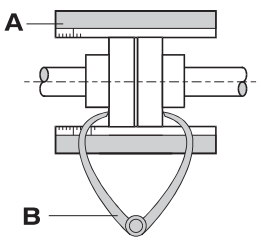

4 Repeat this check at operating temperature and spend time achieving minimum alignment deviation.

5 Fit the protecting guard. See the figure below and the corresponding table for the maximum allowed tolerances for aligning the coupling halves.

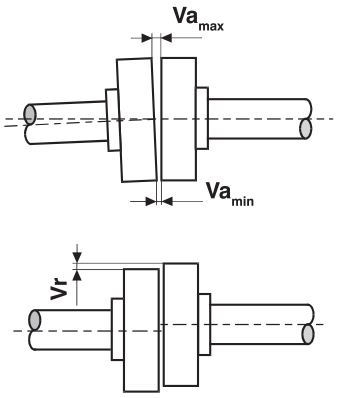

Alignment tolerances						
External diameter of coupling [mm]	Va				Va_{max} - Va_{min} [mm]	Vr_{max} [mm]
	min [mm]		max [mm]			
81-95	2	5*	4	6*	0.15	0.15
96-110	2	5*	4	6*	0.18	0.18
111-130	2	5*	4	6*	0.21	0.21
131-140	2	5*	4	6*	0.24	0.24
141-160	2	6*	6	7*	0.27	0.27
161-180	2	6*	6	7*	0.30	0.30
181-200	2	6*	6	7*	0.34	0.34
201-225	2	6*	6	7*	0.38	0.38

** = coupling with spacer*

Belt drive
Belt drives also increase the loading on the shaft end and the bearings. Therefore, certain limitations must be imposed on the maximum load of the shaft, viscosity, pumping pressure and speed.

3.19.9.7 Guarding of moving parts

Before commissioning the pump, place a protective guard over the coupling or belt drive. This guard must comply with the EN 953 design and construction standard.

For pumps operating at temperatures above 100°C, ensure that bearing bracket and bearings are cooled sufficiently by the surrounding air. Openings in the bearing bracket must not be guarded if the rotating parts do not have any projections (keys or keyways) which could cause injury. This simplifies the inspection and maintenance of the shaft seal.

3.19.9.8 Electrical heating

When a bare shaft pump or a pump unit is delivered with only the cartridge heaters for electrical heating (so without our control panel for electrical heating), the user is responsible for connecting the cartridge heaters to the electric supply (110 V or 230 V).

We advise to connect the cartridge heaters to an electronic or electrical power control device, driven by a temperature sensor placed in close proximity to the cartridge heaters. In order to prevent the motor to start before the required temperature of the pump has been reached, we advise to connect this electronic or electrical power control device to the circuit of the motor.

If the cartridge heaters are not supplied with a separate earth lead, the installation has to provide a safe ground connection.

Do not operate the cartridge heaters at voltages in excess of that stamped on the cartridge heater. Install properly sized fuses/breakers in order to minimize hazards.

Do not twist or braid the wire leads. Where leads are subject to flexing, support the leadwires to prevent them from twisting or breaking off at the terminal end. Also avoid the use of tape on leads where they emerge from the cartridge heater. The adhesive on some tapes can contaminate the cartridge heater and shorten the cartridge heater life.

Before connecting the cartridges check the current local regulations of your electricity provider as well as the EN 60204-1 standard. Leave the connection of electrical devices to qualified personnel and take the necessary measures to prevent damage to electrical connections and wiring.

Cartridge heaters are capable of developing high temperatures. Therefore extreme care should be taken to avoid contact between the cartridge heaters and combustible materials and to keep combustible materials far enough away to be free of the effects of high temperatures.

3.20 Instructions for start-up

3.20.1 General

The pump can be put into service when all arrangements described in chapter 3.19 Installation have been made.

- **Prior to commissioning, responsible operators have to be fully informed on proper operation of the pump/pump unit and the safety instructions. This instruction manual must at all times be available to the personnel.**
- **Prior to commissioning, the pump/pump unit must be checked for visible damage. Damage or unexpected changes must be reported immediately to the plant operator.**

3.20.2 Cleaning the pump

There may be residual mineral oil inside the pump deriving from the pump testing and the initially lubricating of the bearing bushes. If these products are not acceptable for the pumped liquid, the pump should be cleaned thoroughly. Proceed as described in section 3.22.2.8 Draining of fluid.

Remark: *pumps made for food applications are preserved with a food grade oil. The oil used is a NSF H3 approved oil (soluble). Nevertheless the oil is NSF H3 approved, the pump should be cleaned thoroughly before the initial start-up.*

3.20.2.1 Cleaning suction line

When the TG pump is put into service for the first time, suction line must be cleaned thoroughly. Do not use the pump. The TG pump is not meant to pump low viscosity liquids with impurities.

3.20.3 Venting and filling

To operate properly the pump should be vented and filled with the liquid to be pumped before the initial start-up :

- Unscrew the filling plug Bb, Bc, Be and Bd. Fill up the pump with the liquid to be pumped. *At the same time the pump will be vented.*
- Tighten the filling plugs.
- When the TG pump is brought into service for the first time or in case new gaskets are mounted, bolts that compress gaskets must after 3 - 4 days be tightened again (for tightening torques see section 3.22.3.1).

Filling up the pump

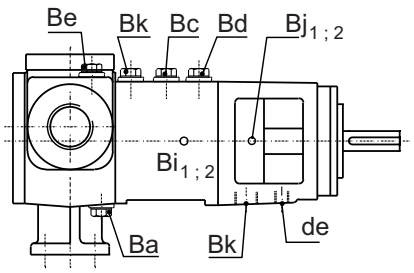

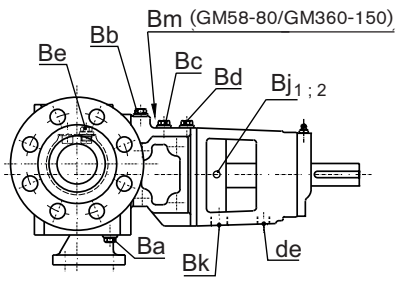

3.20.4 Checklist – Initial start-up

After thorough servicing or when the pump is to be put into service for the first time (initial start-up) the following checklist must be observed:

Supply and discharge line

- ☐ Suction and discharge pipes are cleaned.
- ☐ Suction and discharge pipes are checked for leaks.
- ☐ Suction pipe is protected properly to prevent the ingress of foreign bodies.

Characteristics

- ☐ The characteristics of the pump unit and safety relief valve to be checked (pumptype – see name plate, RPM, working pressure, effective power, working temperature, direction of rotation, NPSHr etc.).

Electrical installation

- ☐ Electrical installation complies with local regulations
- ☐ Motor voltage corresponds with mains voltage. Check terminal board.
- ☐ Make sure that the starting torque is sufficiently high (no star/delta starting will be used).
- ☐ Motor protection is adjusted properly.
- ☐ Direction of motor rotation corresponds with direction of pump rotation.
- ☐ Motor rotation (detached from unit) is checked.

Safety relief valve

- ☐ Safety relief valve (on pump or in piping) is installed
- ☐ Safety relief valve is positioned correctly. Flow direction of safety relief valve corresponds with suction and discharge lines.
- ☐ Make sure a double safety relief valve is installed when the pump has to operate in two directions.
- ☐ The set pressure of the safety relief valve is checked (see nameplate).

Jackets

- ☐ Jackets are installed.
- ☐ Maximum pressure and temperature of the heating/cooling media have been checked.
- ☐ The appropriate heating media or coolant is installed and connected.
- ☐ The installation complies with the safety standards.

Shaft sealing

- ☐ Heating or cooling circuit has been checked for leakages.
- ☐ Pressure, temperature, nature and connections of flush or quench media has been checked.
- ☐ If a double mechanical seal mounted in back-to-back configuration, buffer media must be pressurized prior to starting the pump.
- ☐ When using the PR-version (reverted packing) for chocolate applications:
  The packing is lightly tightened by hand at the factory. When pumping chocolate, the packing needs to be tightened bit by bit at the initial start-up in order to achieve the utmost minimum of leakage, just enough to lubricate the packing rings. Excessively leaking chocolate can overheat in the packing, causing caramelisation, resulting in extra wear of the packing. Check if the external grease supply is into service in order to lubricate the bush bearing at the start-up.

Drive

- ☐ Alignment of pump, motor, gearbox etc. is checked.

Protection

- ☐ All guards and safety devices (coupling, rotating parts, excessive temperature) are in place and operative.
- ☐ In case of pumps that may reach working temperatures of 60°C or more, ensure sufficient safety guards against occasional touching are in place.

3.20.5 Start-up

When the pump is to be put into service the following checklist and procedure must be observed:

- ☐ Pump is filled with liquid.
- ☐ Pump is sufficiently preheated.
- ☐ Quench media is present. Can it circulate freely?
  (***Attention:*** If you have a GD-configuration, is the seal pressurized?)
- ☐ Suction and discharge valves are fully open.
- ☐ Start the pump for a short while and check the direction of rotation of the motor.
- ☐ Start the pump and check suction of liquid (suction pressure).
- ☐ RPM of the pump is checked.
- ☐ Discharge pipe and seal are checked for leaks.
- ☐ Proper operation of the pump is verified.
- ☐ If leakage (PO and PQ versions) of gland packing is too heavy, adjust (tighten) the gland pressure.
  When using the PR-version (reverted packing) for chocolate applications, the packing needs to be tightened bit by bit at the (initial) start-up in order to achieve the utmost minimum of leakage, just enough to lubricate the packing rings. Excessively leaking chocolate can overheat in the packing, causing caramelisation, resulting in extra wear of the packing. Check if the external grease supply is into service in order to lubricate the bush bearing at the start-up.

3.20.6 Shut-down

When the pump is to be put out of service the following procedure must be observed:

- ☐ Turn the motor off.
- ☐ Close all auxiliary service lines (heating/cooling circuit, circuit for flush/quench medium).
- ☐ If solidifying of the liquid must be avoided, clean the pump while the product is still fluid.

Also see section 3.22 Maintenance instructions

Note! *When the liquid flows back from the discharge pipe to the pump, the pump may rotate in the opposite direction. By closing the discharge line valve during the last rotation cycles this can be prevented.*

3.20.7 Abnormal operation

Note! *In case of abnormal operation or when troubles occur the pump must be taken out of service immediately. Inform all responsible personnel.*

- ☐ Prior to restarting the pump, determine the reason for the problem and solve the problem.

3.21 Trouble shooting

Symptom	Cause	Remedy		
No flow Pump not priming	Suction lift too high	1	▪	Reduce difference between pump and suction tank level.
			▪	Increase suction pipe diameter.
			▪	Reduce length and simplify suction pipe (use as few elbows and other fittings as possible). Also see section 3.19 Installation.
	Air leak in suction line	2	▪	Repair leak.
	Very low viscosity	3	▪	Increase pump speed and reduce axial clearance (see section 3.22 Maintenance instructions).
	Suction strainer or filter clogged	4	▪	Clear suction strainer or filter.
	Pump casing incorrectly installed after repair	5	▪	Install pump casing correctly. See section 3.19 Installation.
	Wrong direction of rotation of motor	6	▪	For 3-phase drivers change 2 connections.
			▪	Change suction and discharge opening. (***Attention!*** Check the location of the safety relief valve).
Pump stalls or irregular flow	Liquid level in suction tank falls too low	7	▪	Correct liquid supply
			▪	Provide a level switch
	Output too high	8	▪	Reduce pump speed/or install a smaller pump.
			▪	Install by-pass line with check-valve.
	Air sucking	9	▪	Repair leak in suction line.
			▪	Check or replace shaft seal.
			▪	Check/provide quench on shaft seal.
			▪	Connect plug Bb to the pump discharge in order to increase the pressure in the sealing box.
	Cavitation	10	▪	Reduce difference between pump and suction tank level.
			▪	Increase suction pipe diameter.
			▪	Reduce length and simplify suction pipe (use as few elbows and other fittings as possible). Also see chapter 3.19 Installation.
	Liquid vaporises in pump (e.g. by heating up)	11	▪	Check temperature.
			▪	Check vapour pressure of liquid.
			▪	Reduce pump speed. If necessary install a larger pump.
Not enough capacity	Pump speed too low	12	▪	Increase pump speed. ***Attention!*** Do not exceed maximum speed and check NPSHr.
	Air sucking	13	▪	Repair leak in suction line.
			▪	Check or replace shaft seal.
			▪	Check/provide a quench in the shaft seal.
			▪	Connect plug Bb to the pump discharge in order to increase the pressure in the sealing box.
	Cavitation	14	▪	Reduce difference between pump and suction tank level.
			▪	Increase suction pipe diameter.
			▪	Reduce length and simplify suction pipe (use as few elbows and other fittings as possible). Also see section 3.19 Installation.
	Back pressure too high	15	▪	Check discharge pipe.
			▪	Increase pipe diameter.
			▪	Reduce working pressure.
			▪	Check accessories (filter, heat exchanger, etc.).
	Safety relief valve set too low	16	▪	Correct pressure setting.

Symptom	Cause	Remedy		
Not enough capacity	Viscosity too low	17	▪	Increase pump speed. ***Attention!*** Do not exceed maximum speed and check NPSHr.
			▪	If necessary, install a larger pump.
			▪	If pump is heated by means of heating jackets or electrical heating, reduce the heating input.
	Axial clearance	18	▪	Check axial clearance and correct. See section 3.22 Maintenance instructions.
	Gases come free	19	▪	Increase pump speed. ***Attention!*** Do not exceed maximum speed and check NPSHr.
			▪	Install a larger pump
Pump too noisy	Pump speed too high	20	▪	Reduce pump speed. If necessary, install a larger pump.
	Cavitation	21	▪	Reduce difference between pump and suction tank level.
			▪	Increase suction pipe diameter.
			▪	Reduce length and simplify suction pipe (use as few elbows and other fittings as possible). Also see section 3.19 Installation.
	Back pressure too high	22	▪	Increase pipe diameter.
			▪	Reduce working pressure.
			▪	Check accessories (filter, heat exchanger, etc.).
	Coupling misalignment	23	▪	Check and correct alignment. Also see section 3.19 Installation.
	Vibration of baseplate or pipings	24	▪	Make base plate heavier and/or fix base plate/ pipework better.
	Ball bearings damaged or worn	25	▪	Replace ball bearings.
Pump consumes too much power or becomes hot	Pump speed too high	26	▪	Reduce pump speed. If necesary, install a larger pump.
	Gland packing too tight	27	▪	Check or replace gland packing.
	Coupling misalignment	28	▪	Check and correct alignment. Also see section 3.19 Installation.
	Viscosity too high	29	▪	Increase axial clearance. See section 3.22 Maintenance instructions.
			▪	Heat pump.
			▪	Reduce pump speed.
			▪	Increase discharge pipe diameter.
Rapid wear	Back pressure too high	30	▪	Increase pipe diameter.
			▪	Reduce working pressure.
			▪	Check accessories (filter, heat exchanger, etc.)
	Solid matter in liquid	31	▪	Filter liquid.
	Pump runs dry	32	▪	Correct liquid supply.
			▪	Provide level switch or dry running protection.
			▪	Heat up liquid.
			▪	Stop or reduce air sucking.
	Corrosion	33	▪	Change pump materials or application parameters.
Motor overloading	Back pressure too high	34	▪	Increase pipe diameter.
			▪	Reduce working pressure.
			▪	Check accessories (filter, heat exchanger, etc.).
	Gland packing too tight	35	▪	Check and replace gland packing.
	Viscosity too high	36	▪	Increase axial clearance. See section 3.22 Maintenance instructions.
			▪	Heat pump.
			▪	Reduce pump speed.
			▪	Increase discharge pipe diameter.
Pump leak	Gland packing leaks excessively	37	▪	Check or replace gland packing.
	Mechanical seal leaks	38	▪	Replace mechanical seal.

Symptom	Cause	Remedy		
Rapid wear of the mechanical seal	Viscosity too high	39	▪	Heat the pump.
			▪	Install a double mechanical seal
	Bad de-areating/ dry running	40	▪	Fill pump with liquid.
			▪	Check position of relief valve or top cover.
	Temperature too high	41	▪	Reduce temperature.
			▪	Install suitable mechanical seal
	Too long priming period/ dry running	42	▪	Reduce suction line.
			▪	Provide dry running protection.
			▪	Check maximum allowable dry running speed for the mechanical seal.
	Liquid is abrasive	43	▪	Filter or neutralise liquid.
			▪	Install a double mechancial seal with hard seal faces and barrier liquid.

Note! *If symptoms persist, the pump must be taken out of service immediately. Contact your local supplier.*

3.21.1 Instructions for re-using and disposal

3.21.1.1 Re-use

Re-use or putting the pump out of service should only be undertaken after complete draining and cleaning of the internal parts.

Note!

When doing so, observe adequate safety regulations and take environmental protection measures. Liquids should be drained and following local safety regulations the correct personal equipment should be used.

3.21.1.2 Disposal

Disposal of the pump should only be done after it has been completely drained.
Proceed according to local regulations.

Where applicable please disassemble the product and recycle the part's material.

3.22 Maintenance instructions

3.22.1 General

This chapter only describes operations that can be performed on-site for normal maintenance. For maintenance and repair requiring a workshop contact your local distributor.

- Insufficient, wrong and/or irregular maintenance can lead to malfunctions in the pump, high repair costs and long-term inoperability. Therefore, you should carefully follow the guidelines given in this chapter.

  During maintenance operations on the pump due to inspections, preventive maintenance or removal from the installation, always follow the prescribed procedures.

  Non-compliance with these instructions or warnings may be dangerous for the user and/or seriously damage the pump/pump group.

- Maintenance operations should be performed by qualified personnel only. Always wear the required safety clothing, providing protection against high temperatures and harmful and/or corrosive fluids. Make sure that the personnel read the entire instruction manual and, in particular, indicate those sections concerning the work at hand.

- SPX FLOW is not responsible for accidents and damage caused by non-compliance with the guidelines.

3.22.2 Preparation

3.22.2.1 Surroundings (on site)

Because certain parts have very small tolerances and/or are vulnerable, a clean work environment must be created during on-site maintenance.

3.22.2.2 Tools

For maintenance and repairs use only technically appropriate tools that are in good condition. Handle them correctly.

3.22.2.3 Shut-down

Before commencing the maintenance and inspection activities the pump must be taken out of service. The pump/pump unit must be fully depressurized. If the pumped fluid permits, let the pump cool down to the surrounding temperature.

3.22.2.4 Motor safety

Take appropriate steps to prevent the motor from starting while you are still working on the pump. This is particularly important for electric motors that are started from a distance.
Follow the below described procedure:

- Set the circuit breaker at the pump to “off”.
- Turn the pump off at the control box.
- Secure the control box or place a warning sign on the control box.
- Remove the fuses and take them with you to the place of work.
- Do not remove the protective guard around the coupling until the pump has come to a complete standstill.

3.22.2.5 Conservation

If the pump is not to be used for longer periods:

- First drain the pump.
- Then treat the internal parts with VG46 mineral oil or other preservering liquid (e.g. food grade oil for food applications).
- The pump must be operated briefly once a week or alternatively the shaft must be turned a full turn once a week. This ensures proper circulation of the protective oil.

3.22.2.6 External cleaning

- Keep the surface of the pump as clean as possible. This simplifies inspection, the attached markings remain visible and grease nipples are not forgotten.
- Make sure cleaning products do not enter the ball bearing space. Cover all parts that must not come into contact with fluids. In case of sealed bearings, cleaning products must not attack rubber gaskets. Never spray the hot parts of a pump with water, as certain components may crack due to the sudden cooling and the fluid being pumped may spray into the environment.

3.22.2.7 Electrical installation

- Maintenance operations on the electric installation may be performed only by trained and qualified personnel and after disconnecting the electric power supply. Carefully follow the national safety regulations.

  Respect the above-mentioned regulations if performing work while the power supply is still connected.
- Check if electrical devices to be cleaned have a sufficient degree of protection (e.g. IP54 means protection against dust and splashing water but not against water jets). See EN 60529. Choose an appropriate method for cleaning the electrical devices.
- Replace defective fuses only with original fuses of the prescribed capacity.
- After each maintenance session check the components of the electrical installation for visible damage and repair them if necessary.

3.22.2.8 Draining of fluid

- Close off the pressure and suction lines as close as possible to the pump.
- If the fluid being pumped does not solidify, let the pump cool down to the ambient temperature before drainage.

- For fluids that solidify or become very viscous at ambient temperature, it is best to empty the pump immediately after shutting down by separating it from the piping. Always wear safety goggles and gloves.

- Protect yourself with a protective cap. The fluid may spray out of the pump.
- Open the venting plugs Be, Bb, Bc and Bd.
- If no drain line is provided, take precautions so that the liquid is not contaminating the environment.
- Open the drain plug Ba at the bottom of the pump housing.
- Let drain the liquid by gravity.
- Purge pump spaces with flush media or cleaning liquid by connecting a purge system to the following inlet openings:
  - Ba, Be: the displacement part
  - Ba, Bb: space behind rotor
  - Ba, Bd: space behind bearing bush and first mechanical seal in case of GS, GG and GC shaft sealing versions
  - Ba, Bc: space behind bearing bush and before the mechanical seal box in case of GD shaft sealing version
  - Bc, Bd: packing area and lantern ring in case of PQ shaft sealing version
- Re-assemble the plugs and close the valves, if any.

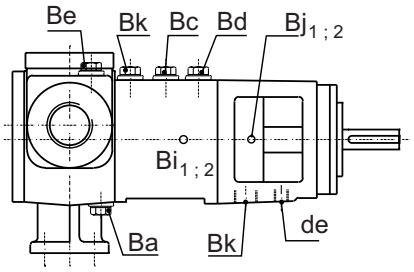

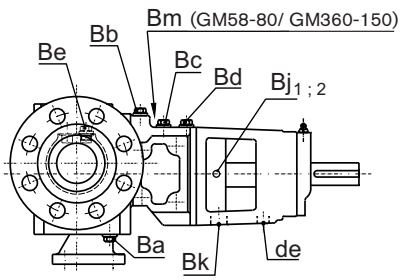

3.22.2.9 Fluid circuits

- Depressurize the jackets and the retaining fluid circuits.
- Uncouple the connections to the jackets and to the circulating or flush/quench media circuits.
- If necessary, clean the jackets and the circuits with compressed air.
- Avoid any leakage of fluid or thermal oil into the environment.

3.22.2.10 Electrical heating

In case that electrical heating (electrical cartridge heaters) is applied, make sure that the electrical heating is switched-off and that the cartridge heaters are cooled down.

3.22.3 Specific components

3.22.3.1 Nuts and bolts

Nuts and bolts showing damage or parts with defective threading must be removed and replaced with parts belonging to the same fixation class as soon as possible.

- Preferably use a torque wrench for tightening.
- For the tightening torques, see table below.

Bolt	Ma (Nm) 8.8 / A4	Plug with edge and flat seal	Ma (Nm)
M6	10	G 1/4	20
M8	25	G 1/2	50
M10	51	G 3/4	80
M12	87	G 1	140
M16	215	G 1 1/4	250
M20	430		
M24	740		
M30	1500		

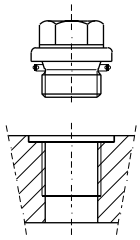

Plug with edge and elastic washer

3.22.3.2 Plastic or rubber components

- Do not expose components made of rubber or plastic (cables, hoses, seals) to the effects of oils, solvents, cleaning agents or other chemicals unless they are suitable.
- These components must be replaced if they show signs of expansion, shrinkage, hardening or other damage.

3.22.3.3 Flat gaskets

- Never re-use flat gaskets.
- Always replace the flat gaskets and elastic rings under the plugs with genuine spares from SPX FLOW.

3.22.3.4 Filter or suction strainer

Any filters or suction strainers at the bottom of the suction line must be cleaned regularly.
Note! *A clogged filter in the suction piping may result in insufficient suction pressure at the inlet. Clogged filter in the discharge line may result in higher discharge pressure.*

3.22.3.5 Anti-friction bearings

TG GM2-25 and TG GM3-32 pumps are equipped with 2RS ball bearings which are grease packed for life. They do not require periodically greasing.

Starting with pump size TG GM6-40, the pumps are equipped with ball bearings which could be greased periodically through a grease nipple at the bearing cover. The standard “multi-purpose” grease (consistent class NLGI-2) is suitable for temperatures up to 120°C.

Recommended greases (Also consult supplier !)

Supplier	NLGI-2	NLGI-3
BP	LS2	LS3
Chevron	Polyurea EP grease-2	
Esso	BEACON 2 (*)	BEACON 3
	BEACON EP2 (*)	UNIREX N3 (*)
Fina	LICAL EP2	CERAN HV
	MARSON L2	
Gulf	Crown Grease No.2	Crown Grease No.3

Supplier	NLGI-2	NLGI-3
Mobil	Mobilux EP2	
SKF	LGMT2	LGMT3
		LGHP2/1 (*)
Shell	ALVANIA R2	ALVANIA R3
	DARINA GREASE R2	
Texaco	Multifak EP-2	
Total	MULTIS EP 2 (*)	

(*) Lubricants recommended by SPX FLOW.

For higher temperatures the standard grease should be replaced by a high temperature grease (consistent class NLGI-3). This grease is, depending on the make, suitable for temperatures up to 150°C or 180°C.

When a pump will be applied in a system or under conditions facing extremely high or low temperatures, the selection of the proper lubricant and correct lubrication interval should be made in consideration with your grease supplier.

Do not mix different grades, different makes of grease together. Such a mix can cause severe damage. Consult your local grease supplier.

Relubrication

- Starting with pump size TG GM6-40, the ball bearings require lubrication through the grease nipple every 5000 running hours or every 12 months (which occurs first).
- Add a correct grade of grease (see 3.22.3.5). Do not overfill (see table below).

TG GM pump type	Bearing type	Grease quantity (gram)
2-25	3302-2RS	No relubrication
3-32	3302-2RS	No relubrication
6-40	3204 or 5204A	5
15-50	3206 or 5206A	10
23-65	3206 or 5206A	10
58-80	3307 or 5307A	15
86-100	3308 or 5308A	20
120-100	3308 or 5308A	20
185-125	3310 or 5310A	25
270-150	3310 or 5310A	25
360-150	7312 BECBJ paired	40

  The ball bearing type 2RS are grease filled for life and need not to be relubricated.
  Both ranges ISO 3000 range and American AFBMA 5000 range are possible and have the same built in dimensions.

- When the anti-friction bearing has been relubricated 4 times it needs to be cleaned. Replace the old grease with new one or renew the anti-friction bearings.
- In the case of high temperatures, anti-friction bearings must be relubricated every 500 to 1000 running hours:
  - when using grease of NLGI-2 class: for service temperatures > 90°C
  - when using grease of NLGI-3 class: for service temperatures > 120°C
- When the load is extremely high, in case the grease looses much oil, anti-friction bearings need relubrication after each peak service. We recommend relubricating while the pump is still operating but after the peak load has occurred.

3.22.3.6 Sleeve bearings

We recommend checking the pump regularly for wear on the gear wheels and sleeve bearings to avoid excessive wear of other parts.

- A quick check can be done by using the front pull-out and back pull-out system. See table for maximum allowable radial clearance of the sleeve bearings.
- For replacement of the sleeve bearings contact your local supplier.

TG GM pump size	Maximum allowed radial clearances
2-25 to 6-40	0.10 mm
15-50 to 23-65	0.15 mm
58-80 to 120-100	0.25 mm
185-125	0.30 mm
270-150	0.30 mm
360-150	0.35 mm

3.22.3.7 Shaft seals

A. Gland packing PO

- For pumps with gland packing, regularly check the packing for leaks. A slight leakage is normal.
- Regularly check connections on the lantern ring (if applicable).
- If the gland packing leaks excessively or when the pump needs serve, the old packing rings must be replaced. This can be done without disassembling bearing and bearing bracket.

1. Gland packing disassembly

1. Loosen the gland nuts (2070).
2. Push back the gland (2040) as far as possible.
3. Remove the old packing (3000) rings using a packing extractor.
4. Thoroughly clean intermediate casing and shaft.

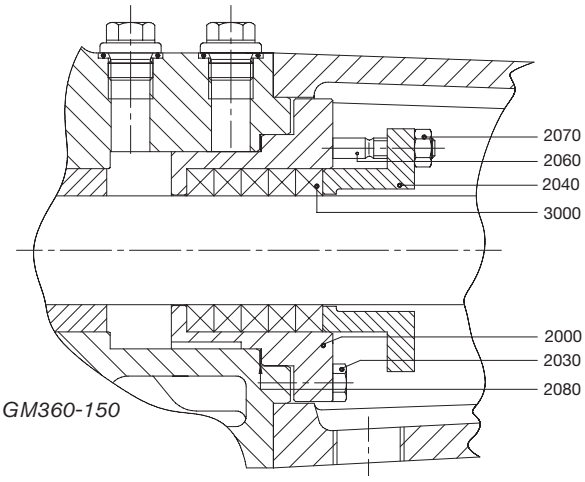

TG GM6-40 to TG GM360-150

2. Gland packing assembly

1. First bend and twist the packing ring as shown in the figure.
2. Wrap it around the pump shaft and press the ring firmly against the bottom.
   - Use packing seals with the right dimensions
   - Do not use a sharp object to push the ring into place as this may cut the ring (e.g. a screwdriver). Use a halved section of piping of the correct size instead.
3. Place the following rings in the same way. Push them down one by one. Take care that the cuts in subsequent rings are rotated at 90 intervals.
4. After all packing rings have been mounted, push the gland (2040) against the last mounted packing ring and tighten the nuts cross-wise by hand. **Do not overtighten the nuts !**

   To avoid running dry, shaft gland packing must always leak a little.

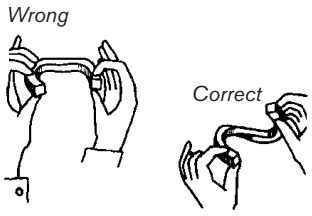

Bending and twisting packing rings

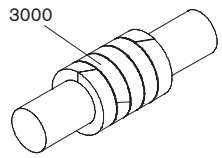

TG GM6-40 to TG GM360-150: 5 pcs

3. Running-in of the pump

1. Fill the pump and start it up.
2. Allow the new packing rings to run in for a few hours.
   Note! *During this time the gland packing will leak more than usual!*
3. While running-in the pump check that it is not overheating. Pay attention to the rotating shaft!
4. After the running-in period slightly tighten the gland nuts cross-wise, until the gland packing does not leak more than a few drops per minute.

B. Gland packing PQ

- For pumps with gland packing, regularly check the packing for leaks. A slight leakage is normal.

- Regularly check connections on the lantern ring (if applicable).
- If the gland packing leaks excessively or when the pump needs serve, the old packing rings must be replaced. This can be done without disassembling bearing and bearing bracket.

1. Gland packing disassembly

1. Loosen the gland nuts (2070).
2. Push back the gland (2040) as far as possible.
3. Remove the old packing (3000) rings using a packing extractor.
4. The lantern ring (2020) which has grooves at its outer diameter can be removed with the aid of a small hook or a packing extractor.
5. Thoroughly clean intermediate casing and shaft.

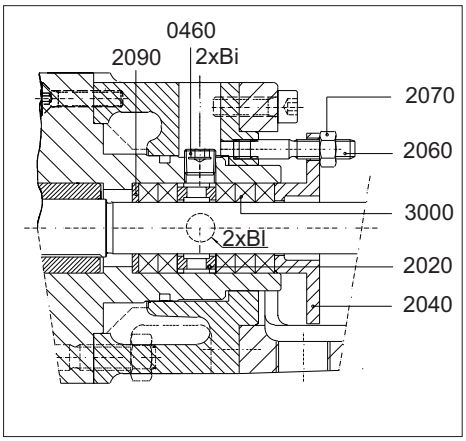

TG GM2-25/TG GM3-32

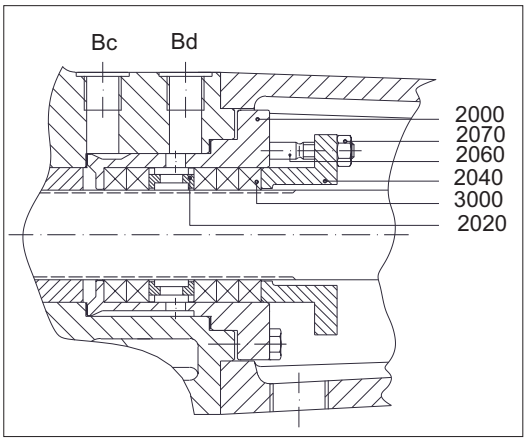

TG GM6-40 to TG GM360-150

2. Gland packing assembly

1. First bend and twist the packing ring as shown in the figure.
2. Wrap it around the pump shaft and press the ring firmly against the bottom.
   - Use packing seals with the right dimensions
   - Do not use a sharp object to push the ring into place as this may cut the ring (e.g. a screwdriver). Use a halved section of piping of the correct size instead.
3. Place the following rings in the same way. Push them down one by one. Take care that the cuts in subsequent rings are rotated at 90° intervals.
4. Fit both lantern ring halves (2020) between second and third packing ring.
5. After all packing rings have been mounted, push the gland (2040) against the last mounted packing ring and tighten the nuts cross-wise by hand.
   Do not overtighten the nuts !

   To avoid running dry, shaft gland packing must always leak a little.

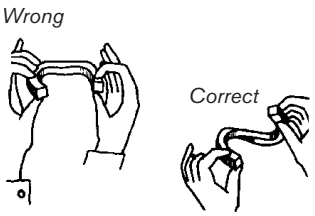

Bending and twisting packing rings

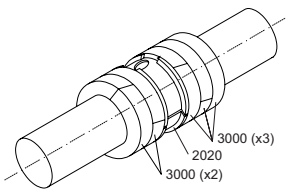

3. Running-in of the pump

1. Fill the pump and start it up.
2. Allow the new packing rings to run in for a few hours.
   Note! *During this time the gland packing will leak more than usual!*
3. While running-in the pump check that it is not overheating. Pay attention to the rotating shaft!
4. After the running-in period slightly tighten the gland nuts cross-wise, until the gland packing does not leak more than a few drops per minute.

C. Reverted packing PR

When pumping chocolate, the packing needs to be tightened bit by bit at the (initial) start-up in order to achieve the utmost minimum of leakage, just enough to lubricate the packing rings. Excessively leaking chocolate can overheat in the packing, causing caramelisation, resulting in extra wear of the packing. If the packing leaks excessively or when the pump needs serve, the old packing rings must be replaced. This can only be done by disassembling bearing and bearing bracket.

Regularly check the external grease supply in order to make sure that bush bearing is sufficiently greased, especially at start-up. Pay attention to the compatibility of the grease with the pumped liquid.

D. Mechanical seal

If the mechanical seal leaks excessively, it must be replaced with one of the same type.

Note! *The materials of the mechanical seal are selected strictly in accordance with the nature of the pumped liquid and the operating conditions. Thus the pump must only handle the liquid for which it was purchased. If the liquid or operating conditions are changed, a mechanical seal suitable for the new operating conditions must be fitted.*

3.22.4 Front pull-out

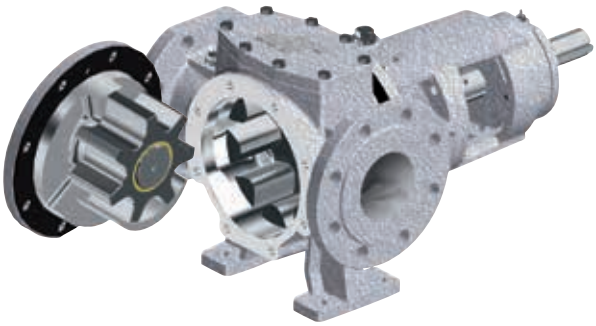

The TG-pumps also have a front pull-out system. To remove liquid residues or to check the idler bearing for wear, the pump cover can be pulled out from the pump housing without disconnecting suction and discharge pipes.

See chapters 4.0 Disassembly/Assembly and section 6.6 Weights.

3.22.5 Back pull-out

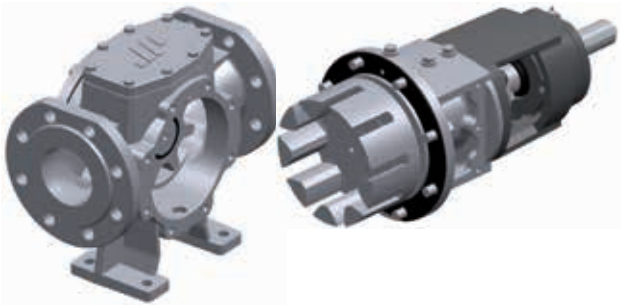

To flush the pump or to check the sleeve bearing for wear the bearing bracket with intermediate casing, shaft and rotor can be easily pulled out backwards without disconnecting the suction and discharge pipes. When a spacer coupling is used, the driving mechanism need not be moved.

See chapters 4.0 Disassembly/Assembly and section 6.6 Weights.

3.22.6 Clearance adjustment

The TG-pumps are delivered with the correct axial clearance setting. In some cases, however, the axial clearance needs to be adjusted:

- When uniform rotor and idler wear need to be compensated.
- When the flow is too low pumping low viscous liquids and the slip has to be reduced.
- When the liquid is more viscous than expected, the friction inside the pump can be reduced by increasing the axial clearance.

Nominal axial clearance	
TG GM pump size	**(s_{ax}) [mm]**
2-25 to 6-40	0.10 – 0.15
15-50 to 23-65	0.10 – 0.20
58-80 to 120-100	0.15 – 0.25
185-125 to 360-150	0.20 – 0.40

Proceed as follows to set the axial clearance:

1. Loosen the set screws (1480).
2. Tighten the bolts (1540).
3. The pump shaft with roller bearing and rotor will be pushed against the pump cover. The axial clearance is then zero.
4. Install a gauge on the bearing bracket.
5. Position the feeler gauge against the shaft end and initialise the gauge.
6. Loosen the bolts (1540) and tighten the set screws (1480) thus pushing rotor and roller bearing backwards.
7. Tighten the set screws until the distance between shaft end and bearing bracket has been increased by the required clearance.
8. Lock the shaft again by tightening the bolts (1540). The set clearance may be changed again. Therefore, when pushing the shaft end backwards, the clearance should be enlarged by 0.02 mm.

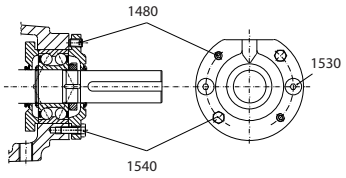

TG GM2-25 to TG GM270-150

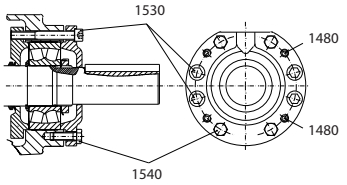

TG GM360-150

3.22.7 Designation of threaded connections.

To make clear what sealing type of threaded connection is provided we denominate them according to standards ISO 7/1 and ISO 228/1 as follows.

3.22.7.1 Threaded connection Rp (example Rp 1/2)

If no flattened sealing face is provided we call the connection Rp accordingly ISO 7/1. This connection has to be sealed in the thread. The plugs or pipe connections must be provided with conical thread according to ISO 7/1 external thread (example ISO 7/1 – R1/2).

Conical plug
ISO 7/1 - R 1/2

Conical pipe end
ISO 7/1 - R 1/2

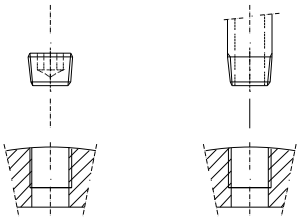

ISO 7/1	Type	Symbol	Example
Internal thread	Cynlindrical (parallel)	Rp	ISO 7/1 – Rp 1/2
External thread	Always conical (tappered)	R	ISO 7/1 – R 1/2

3.22.7.2 Threaded connection G (example G 1/2)

If the threaded connection is provided of a flattened sealing face we call it G according ISO 228/1. This connection can be sealed by a gasket. The plugs or pipe connections must be provided with a sealing collar and cylindrical external thread according to ISO 228/1 (Example ISO 228/1 - G1/2).

Plugs or pipe connections provided with conical thread according to ISO 7/1 external thread (example ISO 7/1 – R1/2) can also be used.

Plug with collar
ISO 228/1 - G 1/2

Conical pipe end
ISO 7/1 - R 1/2

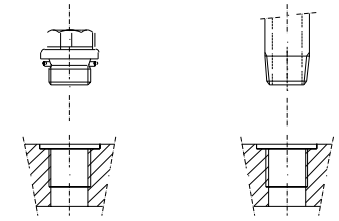

ISO 228/1	Clearance class	Symbol	Example
Internal thread	Only one class	G	ISO 228/1 – G 1/2
External thread	Class A (standard)	G	ISO 228/1 – G 1/2
	Class B (extra clearance)	G...B	ISO 228/1 – G 1/2 B
ISO 7/1	**Type**	**Symbol**	**Example**
External thread	Always conical (tappered)	R	ISO 7/1 – R 1/2

4.0 Instructions for assembly and disassembly

4.1 General

Insufficient or wrong assembly and disassembly can lead to the pump malfunctioning, high repair costs and long-term inoperability. Contact your local distributor for information.

Disassembly and assembly may only be carried out by trained personnel. Such personnel should be familiar with the pump and follow the instructions below.

Non compliance with the instructions or neglecting warnings can damage the user or lead to severe damage to pump and/or pump unit. SPX FLOW is not liable for accidents and damage resulting from such neglect.

4.2 Tools

- Set of nut spanners	Width 8 - width 30
- Set of hexagonal spanners	Width 2 - width 14
- Shaft nut spanner	HN 2-4-6-7-8-10-12
- Screw driver	
- Anti-recoil hammer	Rubber. plastic. lead....
- Carton, paper, shammy	
- Packing extractor	For version PQ, PO, PR
- Coupling extractor	
- Ball bearing extractor	
- Assembly oil	For example Shell ONDINA 15 Esso BAYOL 35
or lubricant	For example OKS 477
- Loctite 241	Max. temperature = 150°C
- Loctite 648	Heat resistant type
- Ball bearing grease	For type see section 3.22.3.5
- Measuring tool for adjustment of the axial clearance	Also see section 3.22.6
- Measuring tool to measure the height of the adjusting screw of the safety valve	Also see section 3.18.3

4.3 Preparation

All activities described in this chapter need to be executed in a workshop suitable for repairs or a mobile workshop, arranged in the working environment.

Always work in a clean surrounding. Keep all sensitive parts, such as seals, bearings, mechanical shaft seals, etc. in their packaging as long as possible.

Always follow the instructions in section 3.22 with regard to:

- taking the pump out of service
- assembly of packing rings
- disassembly of the pump from the system
- lubrication of the bearings
- back pull-out and front pull-out
- adjusting axial clearance
- adjusting safety relief valve

4.4 After disassembly

- After each disassembly carefully clean the parts and check them for damage, if any. Replace all damaged parts.
- Replace damaged parts with original components.
- When assembling, use new graphite gaskets. Never use flat gaskets that have been used previously.

4.5 Anti-friction bearings

4.5.1 General

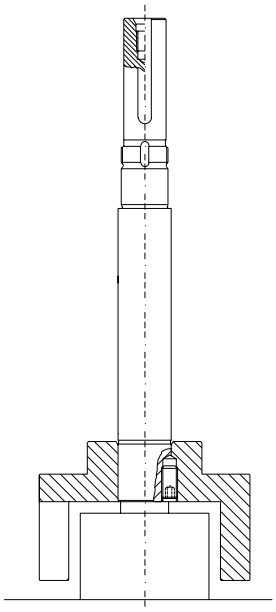

- Never re-use a disassembled bearing or a disassembled lock plate!
- For disassembly and assembly of the bearing (and coupling). use correct tools in order to inspect the pump without any shock loads. Shocks can damage the crisp material of bush bearings and mechanical seal.
- The anti-friction bearing has an interference fit on the pump shaft and a clearance fit in the bearing bracket.
- The anti-friction bearing can easily be mounted when heated to 80°C so that it slides on the pump shaft.
- Always push on the inner ring of the bearing. Pushing on the outer ring may damage the rolling parts between rotor and shaft.
- Support pump shaft at rotor side, not the rotor! Axial force on rotor - pump shaft may damage the shrunk connection.
- Anti-friction bearings type 2RS of TG GM2-25 and TG GM3-32 are sealed and greased for life. Bearings of the other pump sizes are to be greased at the cage.

Note! *Add a correct grade and the appropriate type of grease. Do not overfill.*

4.5.2 TG GM2-25 and TG GM3-32 disassembly

1. First disassemble the flexible coupling half using a coupling extractor.
2. Remove key (1570), set screws (1480) and tap bolts (1540).
3. Remove the bearing cover (1470).
4. Softly tap the lip of the locking washer (1510) out of the groove of the locking nut (1500).
5. Loosen locking nut (1500) and remove it from the shaft.
6. Remove locking washer (1510).
7. Remove the bearing together with the bearing housing (1430) from the pump shaft. Use an appropriate extractor.
8. Disassemble the support ring (1460).

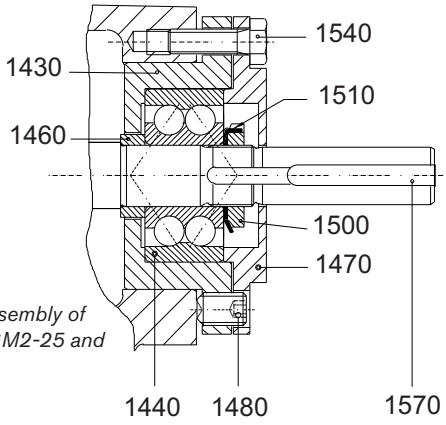

Disassembly and assembly of rolling bearing TG GM2-25 and TG GM3-32

4.5.3 TG GM2-25 and TG GM3-32 assembly

1. Place bearing housing (1430) and support ring (1460) on the pump shaft.
2. Fit a new bearing (1440) on the pump shaft, against the support ring (1460).
3. Fit a new locking washer (1510).
4. Fit the locking nut (1500) and fix it by folding a lip of the locking washer (1510) into one of the grooves of the locking nut (1500).
5. Place the outer bearing cover against the bearing.
6. Fit set screws (1480) and tap bolts (1540).
7. Adjust axial clearance (please refer to chapter 3.22.6).
8. Fit the key (1570) and the flexible coupling half.

4.5.4 TG GM6-40 to TG GM360-150 disassembly

1. First disassemble the flexible coupling half with the aid of a coupling extractor.
2. Remove key (1570), set screws (1480), tap bolts (1540) and long screws (1530).
3. Remove the outer bearing cover (1470) and the V-seal (1490).
4. Detach bearing bracket (1400).
5. Softly tap the lip of the locking washer (1510) out of the groove of the locking nut (1500).
6. Loosen the locking nut (1500) and remove it from the pump shaft.
7. Remove locking washer (1510).
8. Push the inner bearing cover (1430) and the V-seal (1420) away from the bearing.
9. Remove the bearing(s) (1440) from the pump shaft using the appropriate extractor.
10. Disassemble support ring (1460), outer circlips (1450) (only TG GM6-40 to TG GM23-65), inner bearing cover (1430) and V-seal (1420).

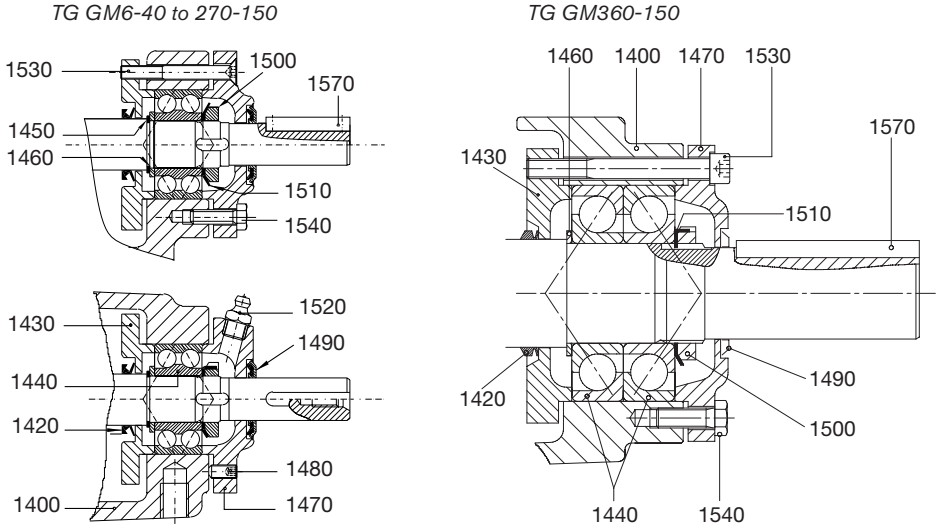

Rolling bearings TG GM6-40 toTG GM360-150

4.5.5 TG GM6-40 to TG GM360-150 assembly

1. Place the V-seal (1420) and the inner bearing cover (1430) on the pump shaft.
2. Fit the outer circlips (1450) (only TG GM6-40 to TG GM23-65) and the support ring (1460) on the pump shaft.
3. Fit a new bearing (1440) on the shaft. Push it against the support ring (1460).
4. In case of TG GM360-150 two ball bearings (1440) are fit paired in O-configuration.
5. Fit a new locking washer (1510).
6. Fit the locking nut (1500) and fix it by folding a lip of the locking washer into one of the grooves of the locking nut (1500).
7. Grease the bearing.
8. Clean the bearing bracket (1400). Fit it on the intermediate casing with the aid of screws (1410).
9. Place both the outer and the inner bearing cover against the bearing. Hold both covers together with the aid of long screws (1530).
10. Fit set screws (1480) and tap bolts (1540).
11. Adjust axial clearance (see section 3.22.6).
12. Fit the V-seal (1490), key (1570) and the flexible coupling half.

4.6 Relief valve

- The relief valve may not be disassembled before the spring has been released completely
- **Before releasing the spring, measure the position of the adjusting bolt. so that the spring afterwards can be adjusted to its original opening pressure**

4.6.1 Disassembly

- Undo the screws (7310) and the cover (7050).
- Measure and record the exact position of the adjusting bolt (7320). (See dimension H).
- Loosen nut (7330) and adjusting screw (7320) until the spring (7150) has been completely released.
- Remove spring casing (7040) by loosening the screws (7300).
- Spring (7150), valve (7010) and valve seat (7110) are now accessible.

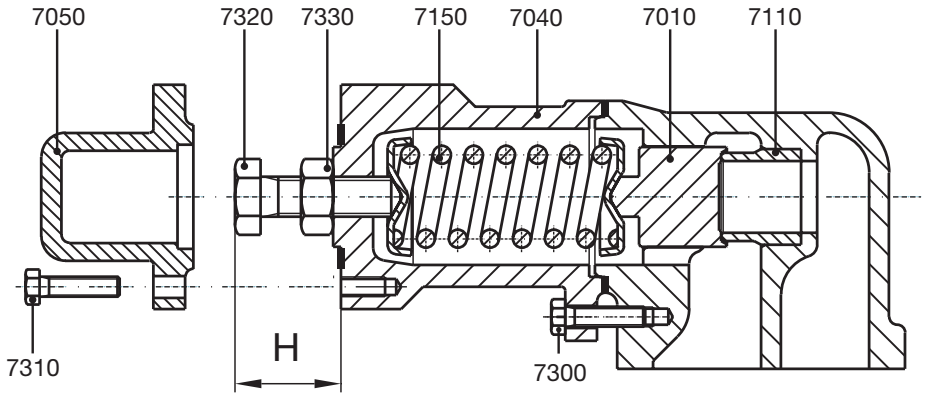

Assembly and disassembly of the safety relief valve

4.6.2 Assembly

- Check the sealing face of both valve seat (7110) and valve (7010).
- In case of a slightly damaged surface, this can be rubbed with an appropriate emery paste. In case of severe damage however, valve seat (pay attention to shrink fit) and valve must be replaced.
- Always mount a correct type of spring with the original dimensions and an appropriate adjusting screw (see section 3.18.3).
- Fit spring casing (7040) and bolts (7300).
- Fit adjusting screw (7320) and nut (7330), screwing the adjusting screw to measured distance H.
- Fix this position by tightening the nut (7330).

Remark: *When another type of spring and/or adjusting bolt is mounted, the opening pressure of the relief valve must be adjusted hydraulically.*

- Fit cover (7050) and screws (7310).

4.7 Electrical heating

4.7.1 General

When replacing a cartridge heater, make sure that the same type of cartridge heater (dimensions, voltage, power, …) is used.

4.7.2 Electrical heating on the pump cover (in the idler pin)

4.7.2.1 Disassembly

- Disconnect the leads of the cartridge heater (0800) from the electronic or electrical power control device.
- Disconnect the flexible conduit (0830) from the electronic or electrical power control device.
- Remove the flexible conduit (0830) from the pump cover (4000) by loosening the enlarger (0840).
- Remove the cartridge heater (0800) by (gently) pulling at the connection leads or at the head of the cartridge heater.

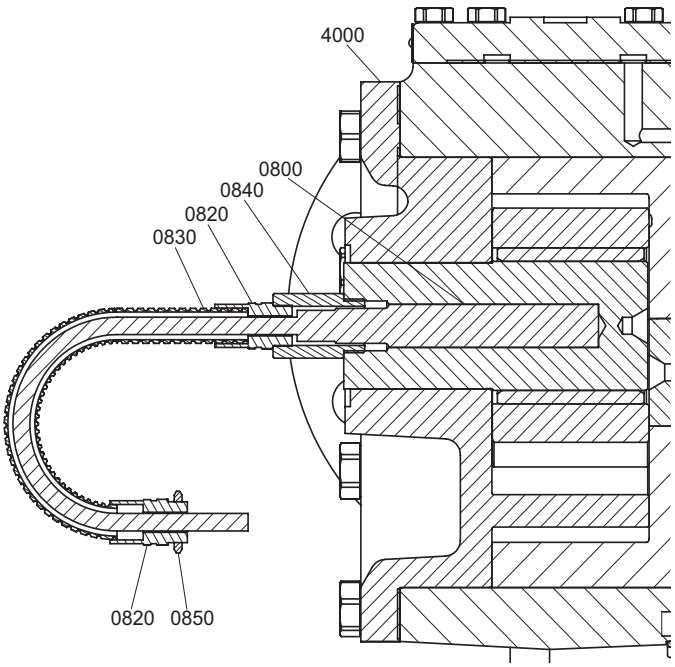

4.7.2.2 Assembly

- Before mounting the cartridge heater (0800), it is absolutely necessary that a copper paste for high temperatures is put on the sheath of the cartridge heater (0800). This ensures a good and equal contact between the cartridge heater (0800) and the idler pin, so that the heat is equally distributed.

  Make sure that the sheath of the cartridge heater (0800) is completely covered with a thin layer of copper paste.

  If the cartridge heater (0800) has a ceramic head, make sure that the copper paste does not get in contact with the ceramic head.
- Mount the cartridge heater (0800) in the bore hole of the idler pin and push it into the bore hole until the end.
- Connect the assembly of the flexible conduit (0830), the fitting type B PG9 (0820) and the enlarger (0840) to the pump cover (4000).
- Connect the leads of the cartridge heater (0800) to the electronic or electrical power control device.
- Connect the flexible conduit (0830) to the electronic or electrical power control device.

4.7.3 Electrical heating around shaft seal (in the intermediate casing)

4.7.3.1 Disassembly

- Disconnect the leads of the cartridge heater (0800) from the electronic or electrical power control device.
- Disconnect the flexible conduit (0830) from the electronic or electrical power control device.
- Remove the flexible conduit (0830) from the intermediate casing (0020) by loosening the enlarger (0840).
- Remove the set screw M10x12 (0860).
- Remove the cartridge heater (0800) by (gently) punching it out of the bore hole (from the side where the set screw was situated) by using a punch in tube form that fits into the thread hole. Take care not to damage the bore hole.

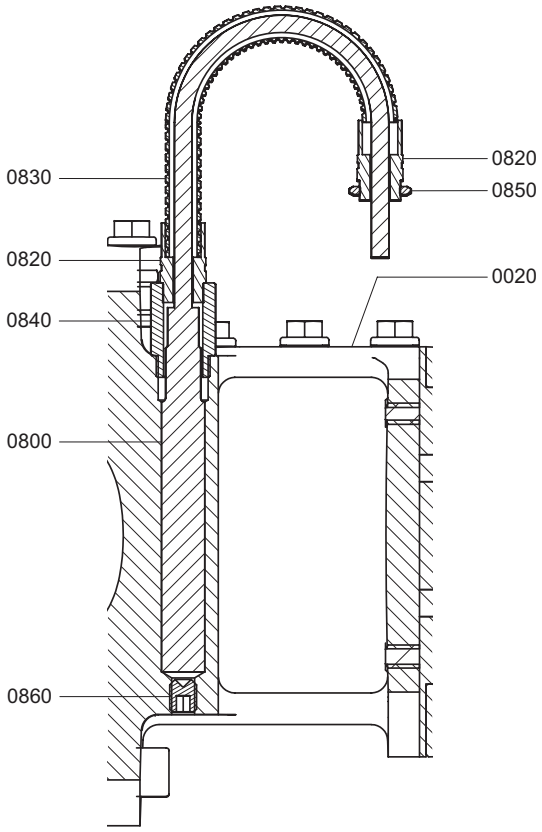

4.7.3.2 Assembly

- Bolt in the set screw M10x12 (0860)
- Before mounting the cartridge heater (0800), it is absolutely necessary that a copper paste for high temperatures is put on the sheath of the cartridge heater (0800). This ensures a good and equal contact between the cartridge heater (0800) and the intermediate casing (0020), so that the heat is equally distributed.

  Make sure that the sheath of the cartridge heater (0800) is completely covered with a thin layer of copper paste.

  If the cartridge heater (0800) has a ceramic head, make sure that the copper paste does not get in contact with the ceramic head.
- Mount the cartridge heater (0800) in the bore hole of the intermediate casing (0020) and push it into the bore hole until the end.
- Connect the assembly of the flexible conduit (0830), the fitting type B PG9 (0820) and the enlarger (0840) to the intermediate casing (0020).
- Connect the leads of the cartridge heater (0800) to the electronic or electrical power control device.
- Connect the flexible conduit (0830) to the electronic or electrical power control device.

4.8 Mechanical seal

Guidelines for assembly and adjustment of the mechanical seal – pump types GS, GG and GD.

4.8.1 General

- All personnel responsible for maintenance, inspection and assembly must be adequately qualified.
- Use specific instructions coming with the mechanical seal which is to be assembled/adjusted.
- The assembling and adjusting of mechanical seals must be performed in a clean workshop.
- Use technically appropriate tools that are in good condition. Handle them correctly.

4.8.2 Preparation

Check if the mechanical seal to be mounted has the appropriate size and construction and verify if it can be assembled according to the following instructions:

- Adjusting dimensions are based on standard EN12756 (DIN24960) mechanical seals, on standard axial clearance and standard pump parts.
- With pump versions GS, GG (except sizes TG GM2-25 and TG GM3-32) the length of the first mechanical seal can be equal to that of EN (DIN) L1K (short version) or that of EN (DIN) L1N (long version). The second mechanical seal of version GG always has a short length equal to DIN-L1K. The TG GM2-25 and TG GM3-32 allow only short L1K EN12756 (DIN24960) mechanical seals.
- Version GD always has both mechanical seals with the short length equal to EN (DIN) L1K.
- If the mechanical seal length is not according to EN12756 (DIN24960) the built-in length and distance have to be recalculated (with the aid of data given in table 4.8.7.1).
- With double mechanical seal version GD (back to back) problems can occur when assembling a seal which is shorter than L1K. In such cases some parts will have to be changed.
- Assemble the mechanical seal with pump in a vertical position with the pump cover downwards. Follow the assembling sequence as described below.
- The mechanical seal has to be adjusted without axial clearance between pumpcover and rotor. Both rotor and shaft are pushed against the pump cover.
  - The standard axial clearance is included in the adjusting distance X and Y (for X see table 4.8.7.1 and for Y see table 4.8.3)
  - Check the shaft surface. Protect any sharp edge with tape or any other appropriate tool.

4.8.3 Special tools

- Conical protection bush (9010).
- Adjusting plate for adjusting distance Y=1 mm (9020) for version GG.
- Adjusting tools for adjusting distance Y (9040) for version GD.
- Adjusting blocks of different height to compose adjusting height X (versions GS and GG).
- Set of tap bolts for temporary fixation of the seal cover or tools (9030 and 9050).
- Recommended lubricant: OKS477 (also appropriate for EP rubber)
- Shammy

For version	Item	Nos.	For TG GM pump size							
			2-25/3-32	6-40	15-50/23-65	58-80	86-100/120-100	185-125	270-150	360-150
GS, GG, GD	9010	1	x	x	x	x	x	x	x	x
GS	9020	2	Adjusting distance Y in mm							
			–	1	1	1	1	1	1	1
	9030	2	–	M6x10	M6x16	M8x20	M8x20	M8x25	M8x25	M10x30
GD	9040	1	Adjusting distance Y in mm							
			0.6	8.9	11.9	10.3	10.8	10.3	10.3	12.2
	9050	2	M6x10	M6x20	M6x20	M8x20	M8x20	M8x20	M8x20	M10x25

Used symbols:
A: Measuring distance from bush bearing to casing
X: Adjusting distance to be measured from first mechanical seal with GS and GG (see table 4.8.7.1)
Y: Adjusting distance from second mechanical seal with GG and GD (see table 4.8.3)

4.8.4 General instructions during assembly

- Do not touch the mechanical seal faces with hand or fingers. Fingerprints can make the mechanical seal untight. Clean the seal faces if necessary. Use a shammy.
- If the mechanical seal faces are made of non self-lubricating material, it is recommended to lubricate the faces a little with the pumped liquid or with thin oil. **Do not use grease!**
- Lubricate the O-rings when assembling. Take care of compliance of the lubricant and the rubber material. **Never use mineral oil using EP rubber O-rings.**
- When fitting PTFE sealings the shaft must be very smooth. Assembly of solid PTFE sealings can be facilitated by heating the stationary ring in water at 100°C during 15 minutes. Preassemble the rotary ring on a dummy shaft and heat both ring and shaft in water at 100°C during 15 minutes. Then let everything cool off. To be tight, PTFE seals must rest ± 2 hours to let them release due to the ability of PTFE to re-form.
- In cases where the mechanical seal is provided with fixing screws to fix the rotating part on the shaft, it is recommended to screw out the fixing screws, degrease both holes and screws and lock them with Loctite (usual type 241 or heat-resistant type 648).
- If the mechanical seal is not provided with a set screw - e.g. Sealol type 043, or Burgmann MG12 or eMG12, a set ring with set screws must be provided. Take the set screws out of the set ring and degrease both holes and screws of the set ring.

Remark: The set ring that is delivered by SPX FLOW guarantees a reliable fixation. There is no danger it will be loosened by alternating loads. SPX FLOW cannot guarantee a reliable fixation with other set rings.

4.8.5 Assembly of the stationary seat

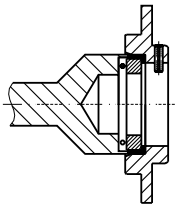

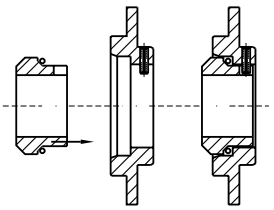

1. Fit the stationary seat(s) into the casing.
2. Use appropriate tools to push the seat perpendicularly in its housing.
3. Protect the seat face with a piece of paper or hardboard and lubricate the rubber sealing elements with a lubricant. This will facilitate the assembly.
   Attention: Do not use mineral oil for EP rubber.
4. Check the perpendicularity of the seat face to the shaft rotating axis after assembling.

4.8.6 Assembly of the rotating part

1. Lubricate the shaft a little with a lubricant.
   Attention for EP rubber: Do not use mineral oil!
2. Protect the sharp edges of the shaft with tape or another protecting tool.
3. Use a conical assembling bush (9010) on the shaft step (see figure).
4. Push the rotating parts against the adjusting shoulder or set ring.
5. Provide the set screws with a drop heat-resistant Loctite and fit the set screws in the rotating part. Tighten the screws.

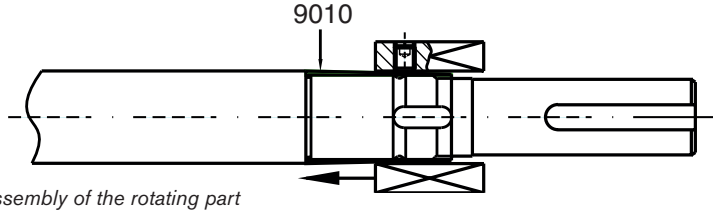

Assembly of the rotating part

4.8.7 Adjustment of mechanical seal

4.8.7.1 GS – Single mechanical seal

1. Mechanical seal without set screws (e.g. Sealol, type 043 and Burgmann type MG12 or eMG12) – Pump size TG GM2-25 and TG GM3-32

The mechanical seal is mounted against a shoulder ring (2090), see figure.
Adjusting is not necessary if the built in length of the mechanical seal corresponds to EN12756 (DIN24960) L_{1K} length. If the mechanical seal built in length is shorter than L_{1K} the shoulder ring width must then be adapted to the correct built in length.

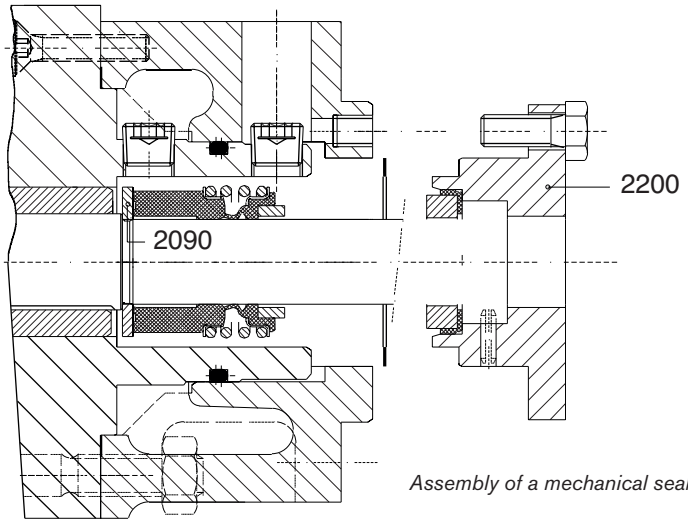

Assembly of a mechanical seal without set ring

2. Mechanical seal fixed on pump shaft by means of set screws

A. Sizes TG GM2-25 and TG GM3-32

To be able to assemble and to adjust those types of mechanical seal the jacket cover (0400) and plugs (0460) must be removed as shown in the figure below.
In general the shoulder ring (2090) cannot be used because the fixed width of the shoulder ring does not allow the narrow tolerances necessary for this type of mechanical seal.

Adjust first the rotating part of the mechanical seal and fix it on the pump shaft by means of the set screws. Once adjusted and fixed the assembling can be continued as shown in the figure. Seal the plugs (0460) with a resin sealant suitable for higher temperature (e.g. Loctite 648). Adjusting method is the same as for the bigger pumps and is described in the next paragraphs.

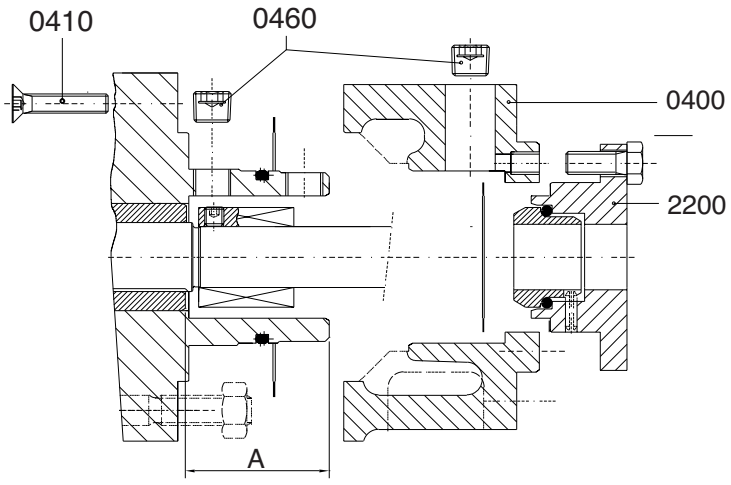

B. Sizes TG GM6-40 to TG GM360-150

The mechanical seal must always be adjusted and fixed on the pump shaft by means of set screws. For mechanical seal without set screws (e.g. Sealol, type 043 and Burgmann type MG12 or eMG12) a special set ring with fixing screws (3030 and 3040) must be used for adjusting the mechanical seal on the pump shaft.

1. Measure distance A.
2. Look for distance X in table. If length of mechanical seal differs from standard L1K or L1N, recalculate X with data from table on page 76.
3. Place the pre-mounted pump cover (0030) on the working bench.
4. Mount gasket (1100).
5. Place at equal distance 2 or 3 adjusting distance blocks of height X on the gasket (1100). Height accuracy of X passes in steps of 0.25 mm.
6. Mount the pump casing (0010).
7. Mount idler with bush (0600) and rotor with shaft (0700).
8. Push the rotor with shaft against the pump cover (0030).
9. Assemble the rotating mechanical seal part (3010) or the set ring (3030).
10. Tighten set screws and secure screws with Loctite.
11. If a set ring (3030) is used, mount the rotating part of the mechanical seal (3010) now.
12. Remove the distance blocks.
13. Assemble the pump cover (0030) with the aid of bolts.
14. Check the smoothness of the seal faces. Clean face if necessary.
15. Lubricate the face with a drop of thin oil or pumped liquid. **Do not lubricate a carbon face!**
16. Assemble gasket (2080) and mechanical seal cover (2200) with the pre-mounted seat.

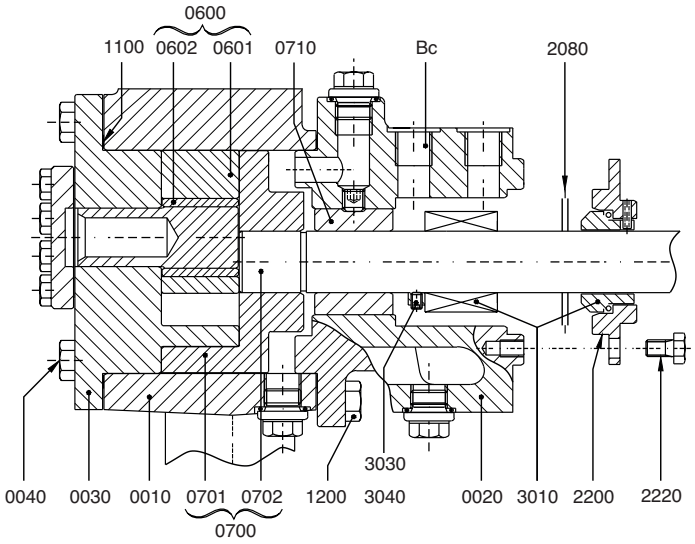

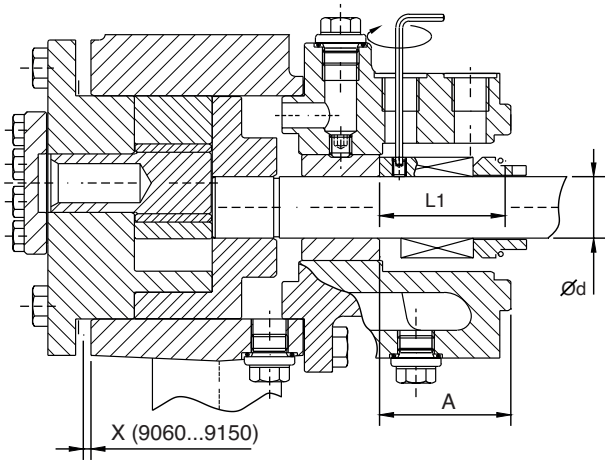

Values for recalculation of adjusting distance X

TG GM pump type	Shaft d [mm]	EN12756 (DIN24960) KU (short type)			EN12756 (DIN24960) NU (long type)	
		L_{1k} [mm]	B	B (with set ring)	$L_{1N\text{-}max}$ [mm]	B
2-25/3-32	16	35	46.1	0	–	–
6-40	22	35.7	34.7	44.7	45	42.2
15-50/23-65	32	42.5	36.7	46.7	55	49.2
58-80	40	45	35.7	45.7	55	45.7
86-100/120-100	45	45	36.3	46.3	60	51.3
185-125/270-150	55	47.5	34.3	44.2	70	56.8
360-150	65	52.5	36.3	46.3	80	63.8

Standard length (L_{1k} or $L_{1N\text{-}max}$) :
A = measured
X = A - B

With non-standard length = L :
A = measured – for B see EN (DIN) KU
X = A - B - L + L_{1k})

Thickness dimensions for composition of adjustment height X

Shaft seal GS & GG				For EN (DIN) KU mechanical seal							For EN (DIN) NU mechanical seal					
Dimension A [mm]				TG GM 2-25/ 2-32	TG GM 6-40	TG GM 15-50/ 23-65	TG GM 58-80	TG GM 86-100/ 120-100	TG GM 185-125/ 270-150	TG GM 360-150	TG GM 6-40	TG GM 15-50/ 23-65	TG GM 58-80	TG GM 86-100/ 120-100	TG GM 185-125/ 270-150	TG GM 360-150
Measured																
lower limit	higher limit	A main	B:	46.13	34.68	36.7	35.73	36.28	34.33	36.33	42.18	49.2	45.73	51.28	56.78	63.83
				Adjusting height X [mm]							Adjusting height X [mm]					
48.65	48.90	48.78		2.65												
48.90	49.15	49.03		2.90												
49.15	49.40	49.28		3.15												
49.40	49.65	49.53		3.40												
49.65	49.90	49.78		3.65												
46.20	46.45	46.33			11.65						4.15					
46.45	46.70	46.58			11.90						4.40					
46.70	46.95	46.83			12.15						4.65					
46.95	47.20	47.08			12.40						4.90					
47.20	47.45	47.33			12.65						5.15					
47.45	47.70	47.58			12.90						5.40					
53.00	53.25	53.15				16.45						3.95				
53.25	56.50	53.40				16.70						4.20				
53.50	53.75	53.65				16.95						4.45				
53.75	54.00	53.90				17.20						4.70				
54.00	54.25	54.15				17.45						4.95				
54.25	54.50	54.40				17.70						5.20				
54.50	54.75	54.65				17.95						5.45				
54.75	55.00	54.90				18.20						5.70				
56.40	56.65	56.53					20.80						10.80			
56.65	56.90	56.78					21.05						11.05			
56.90	57.15	57.03					21.30						11.30			
57.15	57.40	57.28					21.55						11.55			
57.40	57.65	57.53					21.80						11.80			
57.65	57.90	57.78					22.05						12.05			
57.90	58.15	58.03					22.30						12.30			
58.15	58.40	58.28					22.55						12.55			
55.30	55.55	55.43						19.15						4.15		
55.55	55.80	55.68						19.40						4.40		
55.80	56.05	55.93						19.65						4.65		
56.05	56.30	56.18						19.90						4.90		
56.30	56.55	56.43						20.15						5.15		
56.55	56.80	56.68						20.40						5.40		
56.80	57.05	56.93						20.65						5.65		
57.05	57.30	57.18						20.90						5.90		
57.30	57.55	57.43						21.15						6.15		
58.30	58.55	58.43							24.10						1.65	
58.55	58.80	58.68							24.35						1.90	
58.80	59.05	58.93							24.60						2.15	
59.05	59.30	59.18							24.85						2.40	
59.30	59.55	59.43							25.10						2.65	
59.55	59.80	59.68							25.35						2.90	
59.80	60.05	59.93							25.60						3.15	
60.05	60.30	60.18							25.85						3.40	
60.30	60.55	60.43							26.10						3.65	
66.30	66.55	66.43								32.10						9.65
66.55	66.80	66.68								32.35						9.90
66.80	67.05	66.93								32.60						10.15
67.05	67.30	67.18								32.85						10.40
67.30	67.55	67.43								33.10						10.65
67.55	67.80	67.68								33.35						10.90
67.80	68.05	67.93								33.60						11.15
68.05	68.30	68.18								33.85						11.40
68.30	68.55	68.43								34.10						11.65

Remark: *EN (DIN) KU mechanical seal with set ring: substract width of set ring from adjusting height X (normal width of set ring = 10 mm)*

4.8.7.2 GG – Double mechanical seal tandem

1. Assemble the first mechanical seal using the same procedure as a single mechanical seal, type GS (see section 4.8.7.1).
2. Fix the mechanical seal cover (2200) with 2 bolts (9030) without tightening them. Leave the gasket (2080) uncompressed.

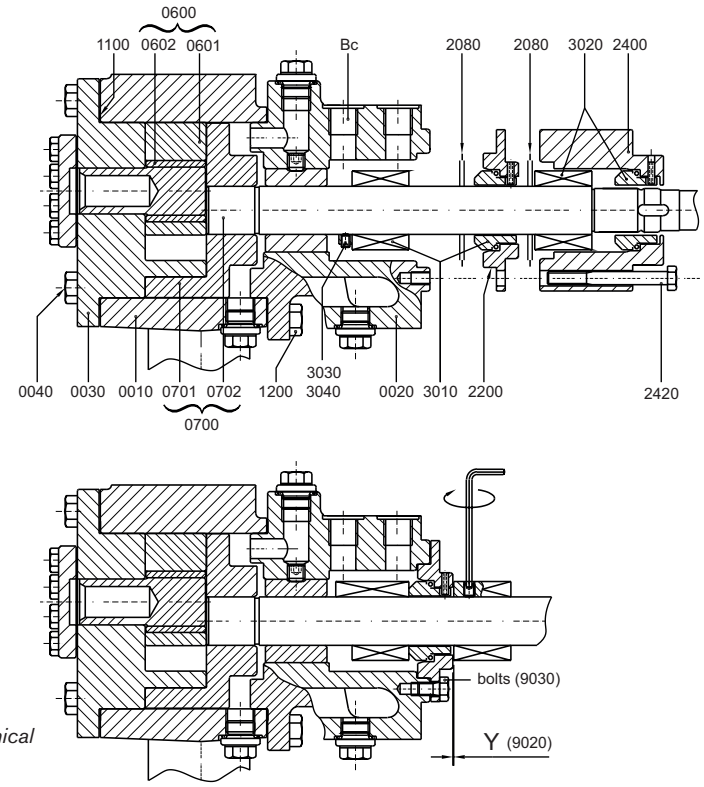

Assembly of double mechanical seal in tandem (GG)

3. Place 2 distance plates (9020) of 1 mm thickness (Y=1 mm) on the sealing cover (not for TG GM2-25 and TG GM3-32, if Y=0)
4. Assemble the second mechanical seal (3020).
5. Remove the distance plate (9020) and the two bolts (9030).
6. Mount second gasket (2080) and mechanical seal casing (2400).

4.8.7.3 GD – Double mechanical seal “Back-to-back”

1. Assemble pump casing (0010) with pump cover (0030), idler complete (0600), rotor with shaft (0700) and pre-assembled intermediate casing (0020).
2. Tighten bolts (0040/0210 and 1200).
3. Pre-mount the stationary seats into the intermediate casing (0020) and into the seal cover (2400).
4. Place the pump in a vertical position with pump cover downwards and push both rotor and shaft against the pump cover.
5. Fit the lock ring (3050) if any.
6. Check the smoothness of the seal faces. Clean the face if necessary.
7. Lubricate the faces with a drop of thin oil or pumped liquid. **Do not lubricate a carbon face!**
8. Mount the rotating seal part of the first mechanical seal (3010).
9. Adjust the seal length on distance Y by means of a special U-shaped tool (9040) (See 4.8.3 Special tools).
10. Lock the adjusting tool by means of 2 bolts (9050).
11. Tighten the screws of the mechanical seal and secure them with Loctite.

12. Remove the adjusting tool (9040) and the two bolts (9050).
13. Assemble the rotating part of the second mechanical seal (3020). Push it against the first mechanical seal and secure the fixing screws with Loctite.
14. Check the smoothness of the seal faces. Clean the face if necessary.
15. Lubricate the faces with a drop of thin oil or pumped liquid. Do not lubricate a carbon face!
16. Fit gasket (2080), distance ring (2600), second gasket (2080) and seal cover (2400) with the pre-mounted seat.

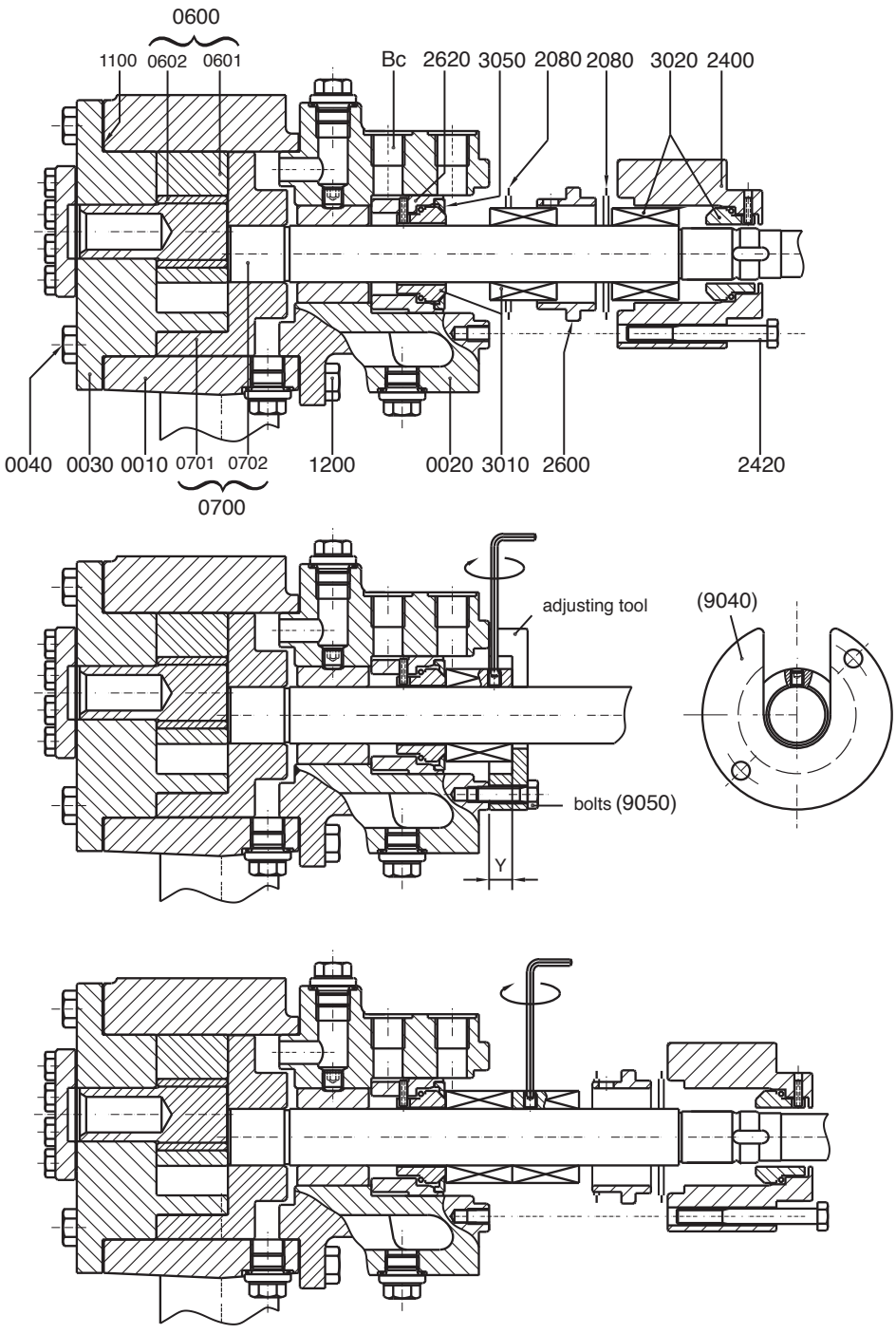

Assembly of a double mechanical seal "back-to-back" (GD)

4.8.7.4 GC – Mechanical seal cartridge

A. General

1. Clean the shaft and casing and check if sealing faces are in good condition.
   Use always a new gasket (2080) that is in good condition.
   Ensure that the auxiliary connection openings are in the good position and accessible for use.
   For exact position, see the figures and detailed instructions in the next paragraphs.
2. Lubricate the O-ring inside the shaft sleeve (for lubricant see sections 4.8.4 and 4.8.5).
   Use a conical assembling bush (9010) on the shaft step (see section 4.8.6).
   Put the cartridge on the shaft and assemble to the pump casing.
3. Bolt the cartridge seal plate securely to the pump housing.
   To allow the shaft turning during assembling remove the black coloured assembling jig but keep the non-coloured jigs in place. The jigs secure the right axial position of the mechanical seal and center the shaft sleeve.
4. Continue assembling of the pump and adjust axial pump clearance (see section 3.22.6).
5. Fix the shaft sleeve of the cartridge seal to the pump shaft by means of the fixing set screws. Secure the set screws with Loctite. Once the cartridge is fixed to the pump shaft and to the pump housing all assembling jigs must be removed. Keep the jigs in a safe place to reassemble the cartridge seal in case of disassembly for repair.
6. Plastic caps on threaded connection openings should be removed before commissioning.
7. Take the necessary safety precautions to prevent injuries during operation and maintenance by accident, e.g. liquid or steam emissions, contact with rotating parts and hot surfaces.

B. Single mechanical seal cartridge Burgmann QN3 and TN3

1. Position the cartridge according to the next figures.
2. Position the drain connection of the TN3 (1x NPT 1/8) always to the bottom.
3. On QN3 cartridge the drain connection (1x NPT 1/8) must always be plugged off or connected to a closed drain line. The normal position is to the bottom and allows drainage of quench liquid.
4. If turned to the top the opening NPT 1/8 can be used as a vent but in that case the bracket must be provided by an extra access hole.

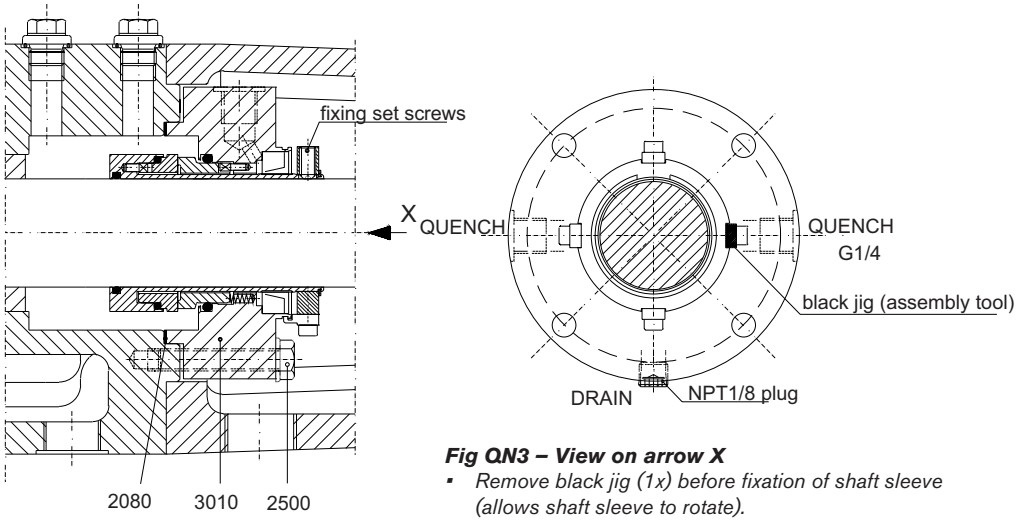

Fig QN3 – View on arrow X

- *Remove black jig (1x) before fixation of shaft sleeve (allows shaft sleeve to rotate).*
- *Remove non-coloured jigs (3x) after pump assembly and adjusting axial clearance.*

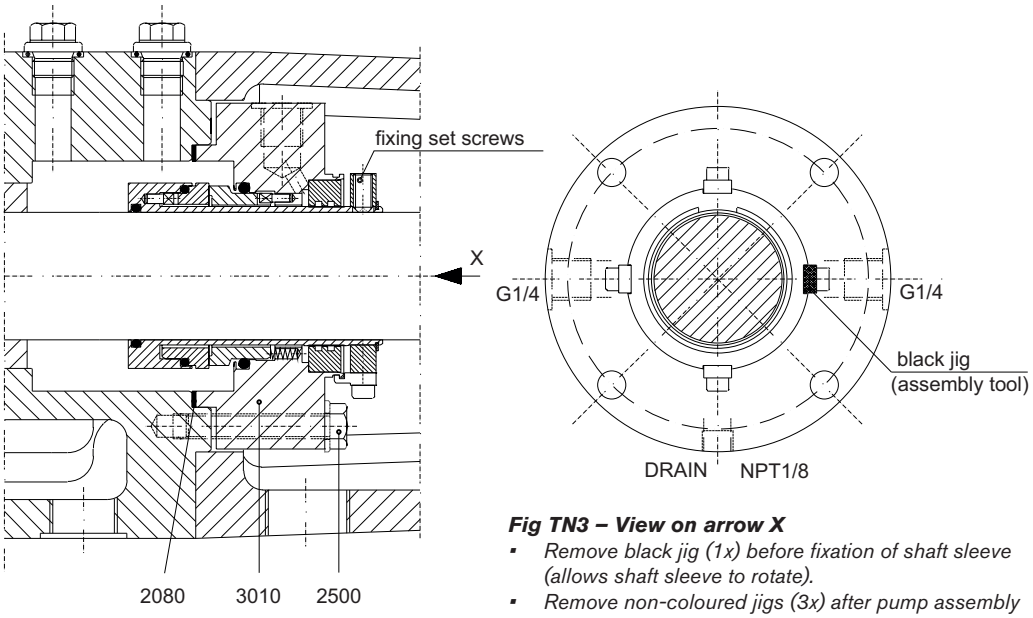

Fig TN3 – View on arrow X

- *Remove black jig (1x) before fixation of shaft sleeve (allows shaft sleeve to rotate).*
- *Remove non-coloured jigs (3x) after pump assembly and adjusting axial clearance.*

TN3 cartridge used with steam quench

If the TN3 cartridge is used with steam quench connect steam and condense line according to fig TN3 Steam.

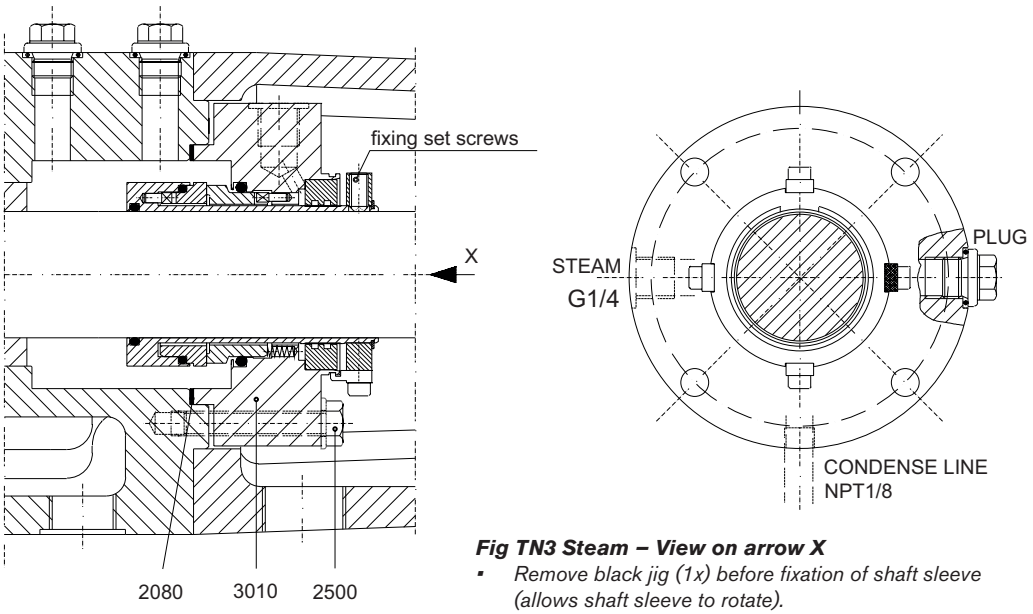

Fig TN3 Steam – View on arrow X

- *Remove black jig (1x) before fixation of shaft sleeve (allows shaft sleeve to rotate).*
- *Remove non-coloured jigs (3x) after pump assembly and adjusting axial clearance.*

1. The steam can been connected to one G1/4 opening at the left or the right side of the bracket. The opposite G1/4 opening must be plugged off.
2. A condense line can been connected to the NPT 1/8 opening if any; otherwise allow this NPT 1/8 opening to open so allowing steam to expel into the atmosphere.
   Steam pressure must be released in such a way that only a small stream of steam is expelled into to the atmosphere.
3. Take the necessary safety precautions to prevent injuries by steam during operation and maintenance.

C. Double Mechanical seal cartridge Burgmann DN3

1. Position the cartridge according to fig DN3.
2. Position the G1/4 openings marked OUT and IN according to the direction of rotation of the pump shaft. To define the exact direction of rotation look on the pump shaft (see also 3.19.4). The OUT opening must be positioned at the highest top position to allow evacuation of air and gases.
3. In case the pump shall run in both directions of rotations the OUT and IN opening shall be placed following the most used or most critical direction of rotation. In case of doubt consult your supplier or Burgmann.

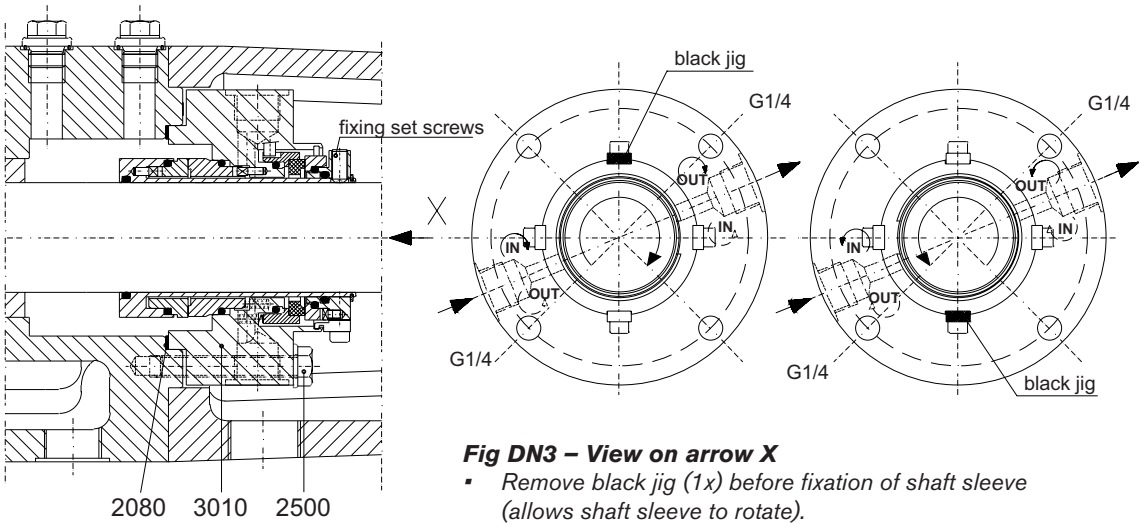

Fig DN3 – View on arrow X

- *Remove black jig (1x) before fixation of shaft sleeve (allows shaft sleeve to rotate).*
- *Remove non-colored jigs (3x) after pump assembly and adjusting axial clearance.*

4. Always provide a liquid quench.

   If the liquid quench is non-pressurized or the pressure is lower than the pressure in the shaft seal box the double mechanical seal acts as a tandem seal arrangement.

   If the liquid quench is pressurized the double mechanical seal acts as a back to back arrangement. In such cases the pressure of the liquid quench must be 10% higher than the maximum pressure in the shaft seal box.

   Do not give too much over pressure i.e. 1.5 bar above pressure of the shaft seal box is recommended as maximum.

   Under normal circumstances the pressure in the shaft seal box is equal to the suction pressure plus the half-differential pressure (Δp). In case of doubt measure the pressure in the shaft seal box or consult your supplier.
5. For arrangement of liquid quench see 3.19.8.3 (non-pressurized quench) and 3.19.8.4 (pressurized quench) or consult your supplier or Burgmann.

Remark: Double cartridge mechanical seals can also be delivered for gas quench (= special execution). In such cases, follow the special instructions that will be received with the cartridge.

D. Triple lip-seal cartridge

The entire cartridge can be disassembled from the bareshaft pump as one single seal unit. Further disassembly of the unit requires an SPX FLOW service intervention and/or support.

4.9 Coupling guard

Assembly

1. Fit pump side plate (0351) with bolt (0352) on pump while assembling pump.

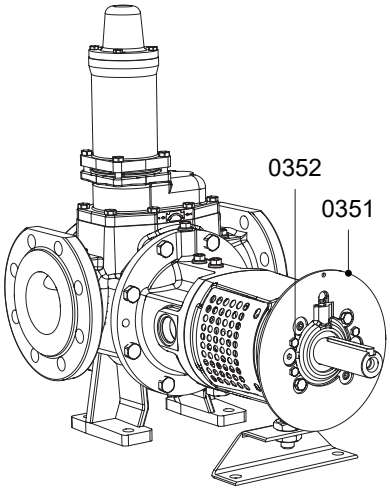

2. Place the drive side plate (0361) over the drive shaft from top side. place 2nd drive side plate (0361) over the drive shaft from bottom side

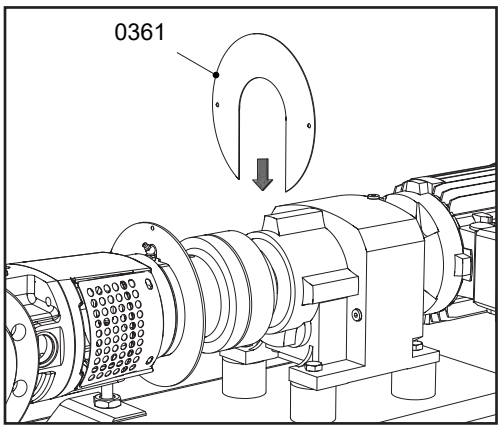

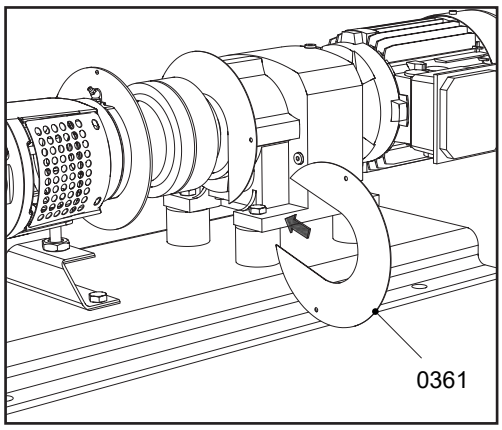

3. Fit the push rivet (0367) on the drive side plate.

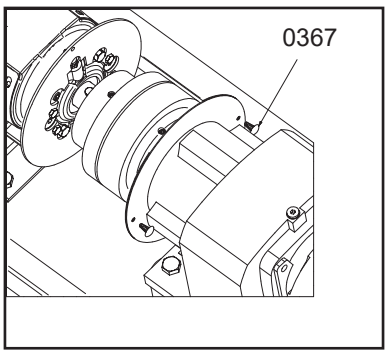

4. Fit the jacket (0362) at drive side. The annular grove must be located at drive side. fit the annular groove of the jacket on drive side plate.

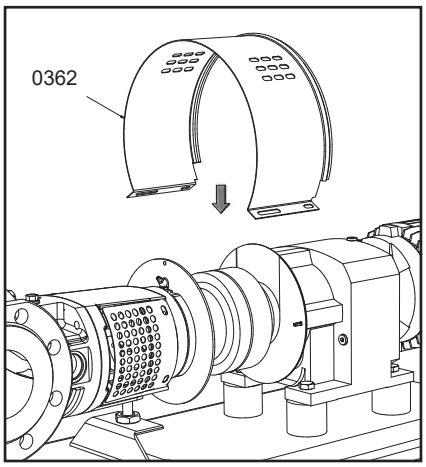

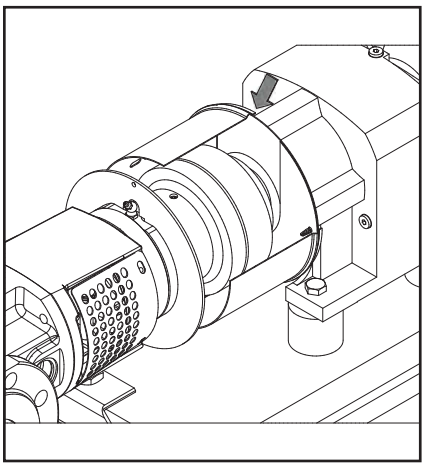

5. Close the jacket and fit the bolt (0363), washer (0365), savetix washer (0366) and savetix nut (0364).

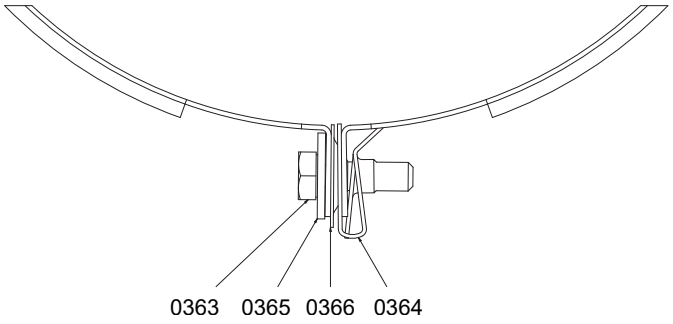

5. Fit the jacket (0362) at pump side. Place it over the present jacket at drive side. The annular groove must be located at pump side.

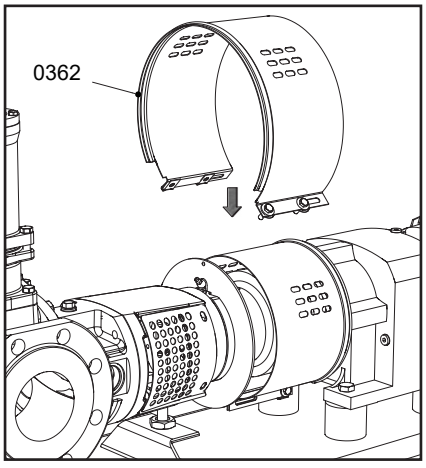

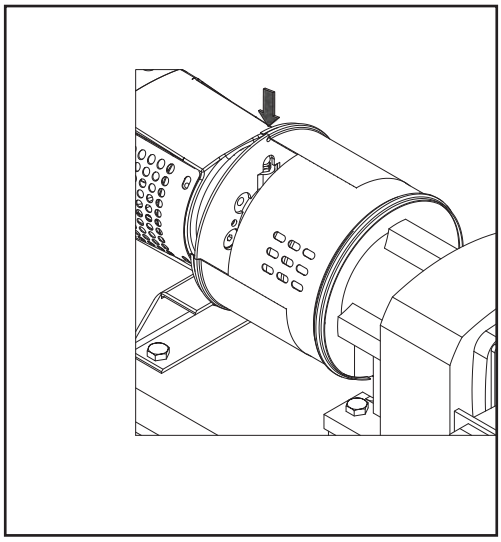

6. Slide the jacket at drive side towards the drive as far as possible.

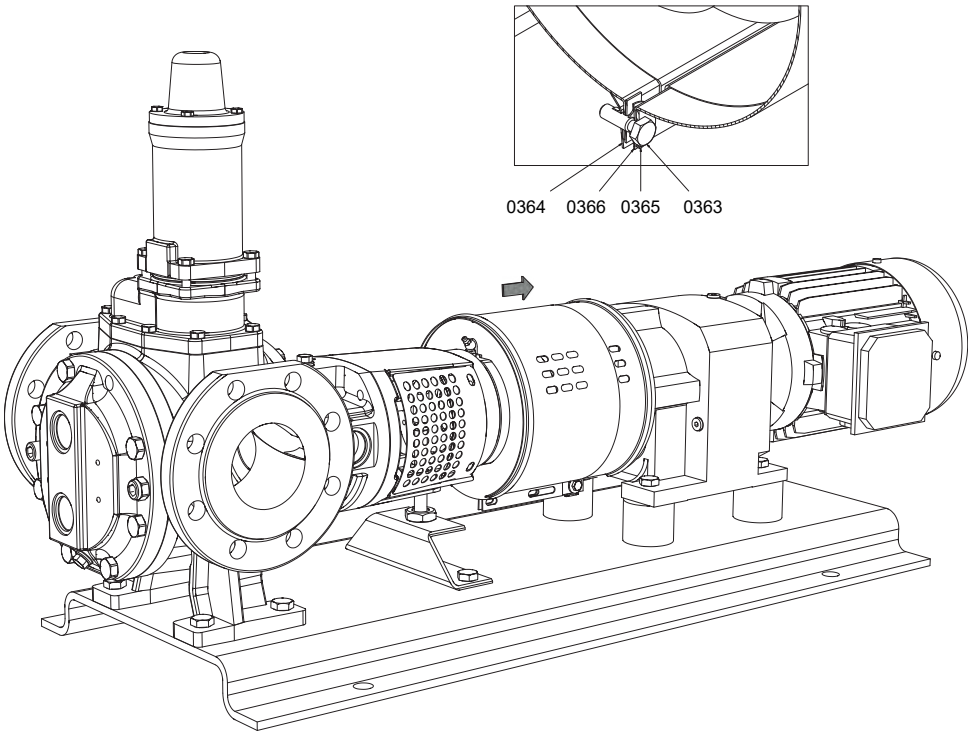

7. Fix both jackets with bolt (0363), washer (0365), savetix washer (0366) and savetix nut (0364).

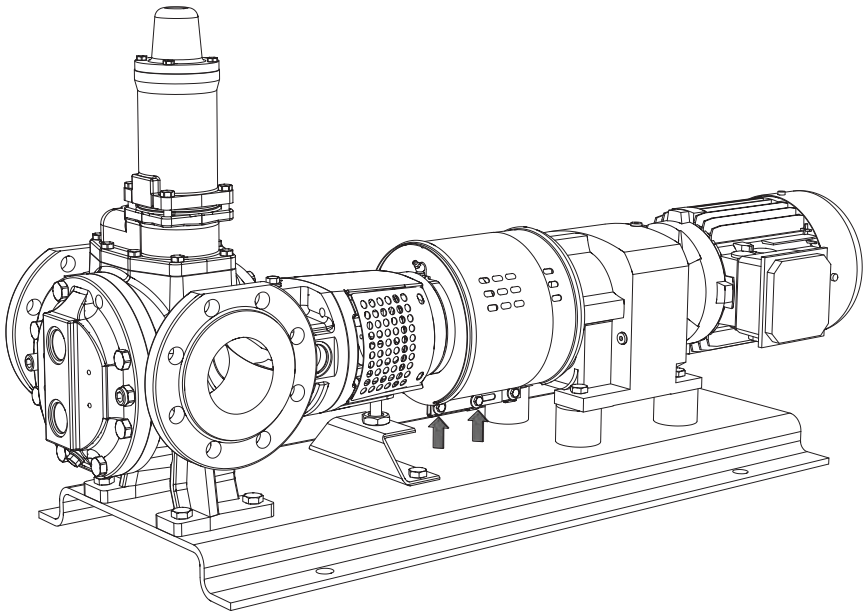

5.0 Sectional drawings and part lists

How to order spares

When ordering spare parts, please state:
1. Pump type and serial number (see name plate)
2. Position number, quantity and description

Example:
1. *Pump type: TG GM58-80 G2TT UR6 UR8 GCD WVBV*
   Serial number: 2000-101505
2. *Pos 0600, 1, Idler + Bush complete*

5.1 TG GM2-25 and TG GM3-32

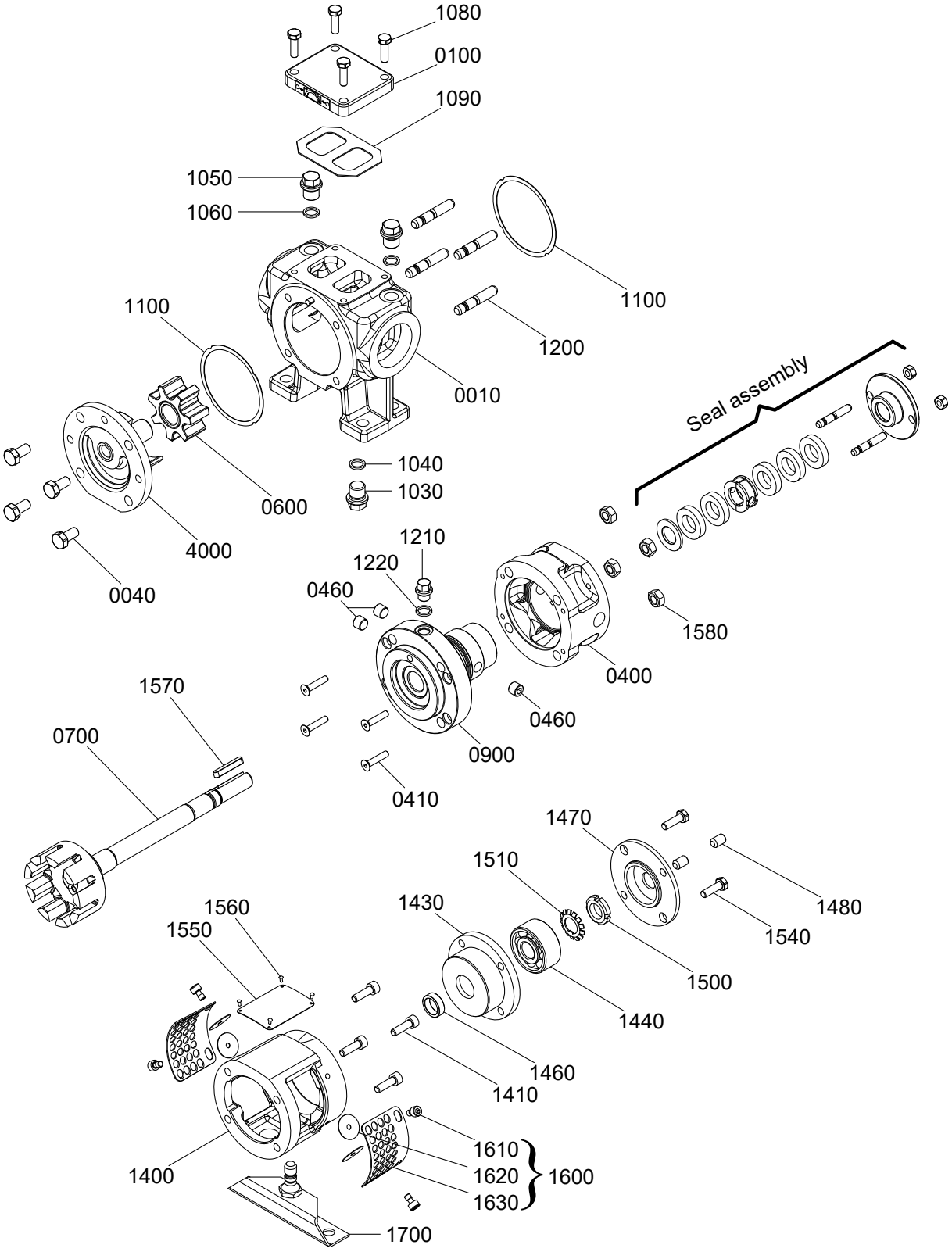

5.1.1 Hydraulic part

Pos.	Description	Nos./pump	Preventive	Overhaul
0010	pump casing, thread connection	1		
0040	tap bolt	4		
0100	top cover, complete	1		
0400	jacket cover, on shaft seal	1		
0410	countersunk screw	4		
0460	plug PQ version	2		
	plug Gx version	3		
0600	idler + bush, complete	1	x	
0700	rotor + shaft, complete	1	x	
0900	Intermediate casing complete	1	x	
1030	plug	1		
1040	sealing ring	1	x	x
1050	plug	2		
1060	sealing ring	2	x	x
1080	tap bolt	4		
1090	gasket	1		x
1100	gasket	2	x	x
1200	stud bolt	4		
1210	plug	1		
1220	sealing ring	1	x	x
1570	key	1		
1580	nut	4		
4000	pump cover	1	x	x

5.1.2 Bearing bracket

Pos.	Description	Nos./pump	Preventive	Overhaul
1400	bearing bracket	1		
1410	allen screw	4		
1430	bearing housing	1		
1440	ball-bearing	1	x	x
1460	support ring	1		
1470	bearing cover	1		
1480	set screw	2		
1500	locking nut	1		
1510	locking washer	1	x	x
1540	tap bolt	2		
1550	nameplate	1		
1560	rivet	4		
1600	mesh guard, complete	2		
1610	*Savetix® allen screw - st. steel*	*4*		
1620	*Savetix® washer - st. steel*	*4*		
1630	*mesh guard - st. steel*	*2*		
1700	bracket support, complete	1		

5.1.3 Flange connection options

Pos.	Description	Nos./ pump	Preventive	Overhaul
0010	G1: pump casing	1		
0050	pin-stainless steel	1		
Screwed on flanges (optionally)				
9000	screw on flanges	1		
0060	collar piece	2		
0070	loose flange	2		

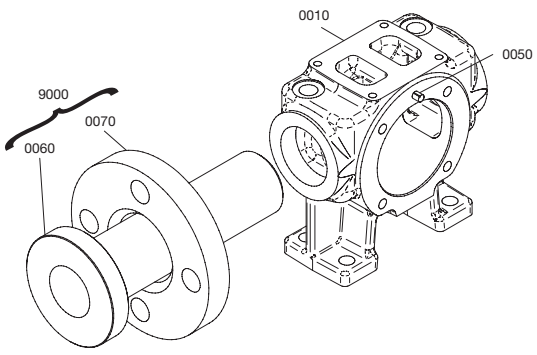

5.1.4 S-jacket options

5.1.4.1 S-jacket on pump cover

Pos.	Description	Nos./ pump	Preventive	Overhaul
0200	jacket cover	1		
0210	tap bolt	4		
0220	gasket	1	x	x
0230	allen screw	2		

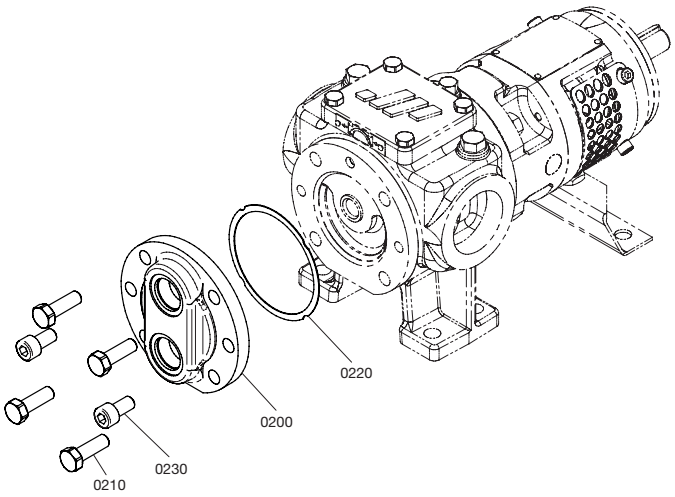

5.1.4.2 S-jacket around shaft seal

Pos.	Description	Nos./ pump	Preventive	Overhaul
0400	jacket cover	1		
0420	gasket	1	x	x
0430	plug	2		
0440	sealing ring	2	x	x
0470	O-ring	1	x	x

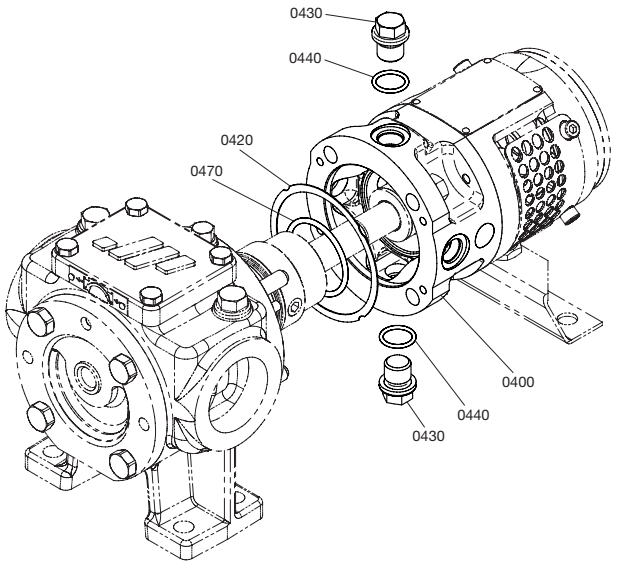

5.1.5 Seal options

5.1.5.1 Packing rings – PQ

Pos.	Description	Nos./ pump	Preventive	Overhaul
2020	lantern ring, split	1		
2040	gland	1		
2060	stud bolt	2		
2070	nut	2		
2090	support ring	1		
3000	packing ring	5	x	x

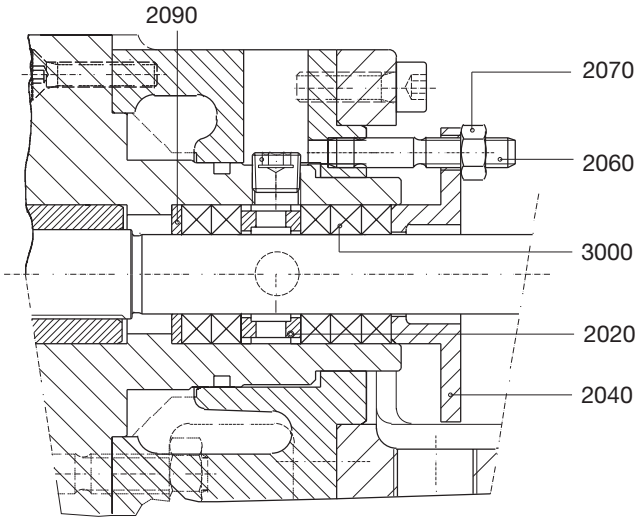

5.1.5.2 Single mechanical seal – GS

Pos.	Description	Nos./ pump	Preventive	Overhaul
2080	gasket	1	x	x
2090	support ring (optional)	1		
2200	seal cover	1		
2210	pin	1		
2220	tap bolt	4		
3010	mechanical seal	1	x	x

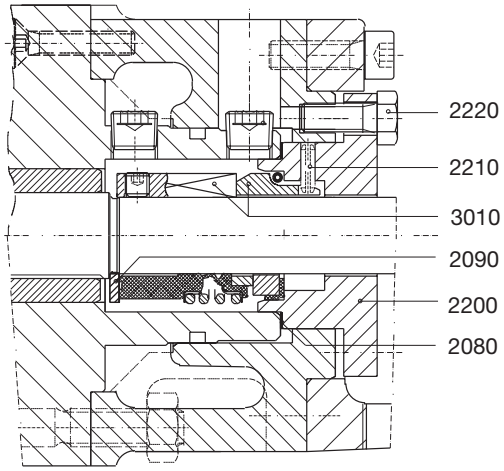

5.1.5.3 Double mechanical seal tandem – GG

Pos.	Description	Nos./ pump	Preventive	Overhaul
2080	gasket	2	x	x
2090	support ring	1		
2210	pin	1		
2400	seal cover	1		
2410	pin	1		
2420	tap bolt	4		
2440	seat housing	1		
3010	mechanical seal	1	x	x
3020	mechanical seal	1	x	x

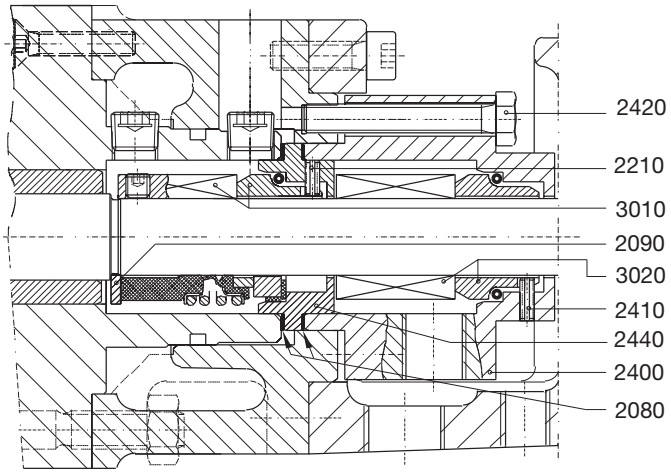

5.1.5.4 Double mechanical seal back-to-back – GD

Pos.	Description	Nos./ pump	Preventive	Overhaul
2080	gasket	2	x	x
2400	seal cover	1		
2410	pin	1		
2430	plug	2		
2600	spacer ring	1		
2610	tap bolt	4		
2620	seat housing	1		
2640	pin	1		
3010	mechanical seal	1	x	x
3020	mechanical seal	1	x	x
3050	retaining ring (optional)	1		

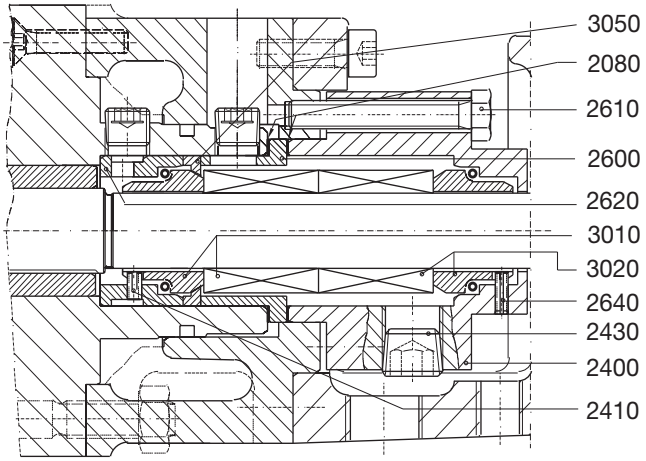

5.2 TG GM6-40 to TG GM360-150

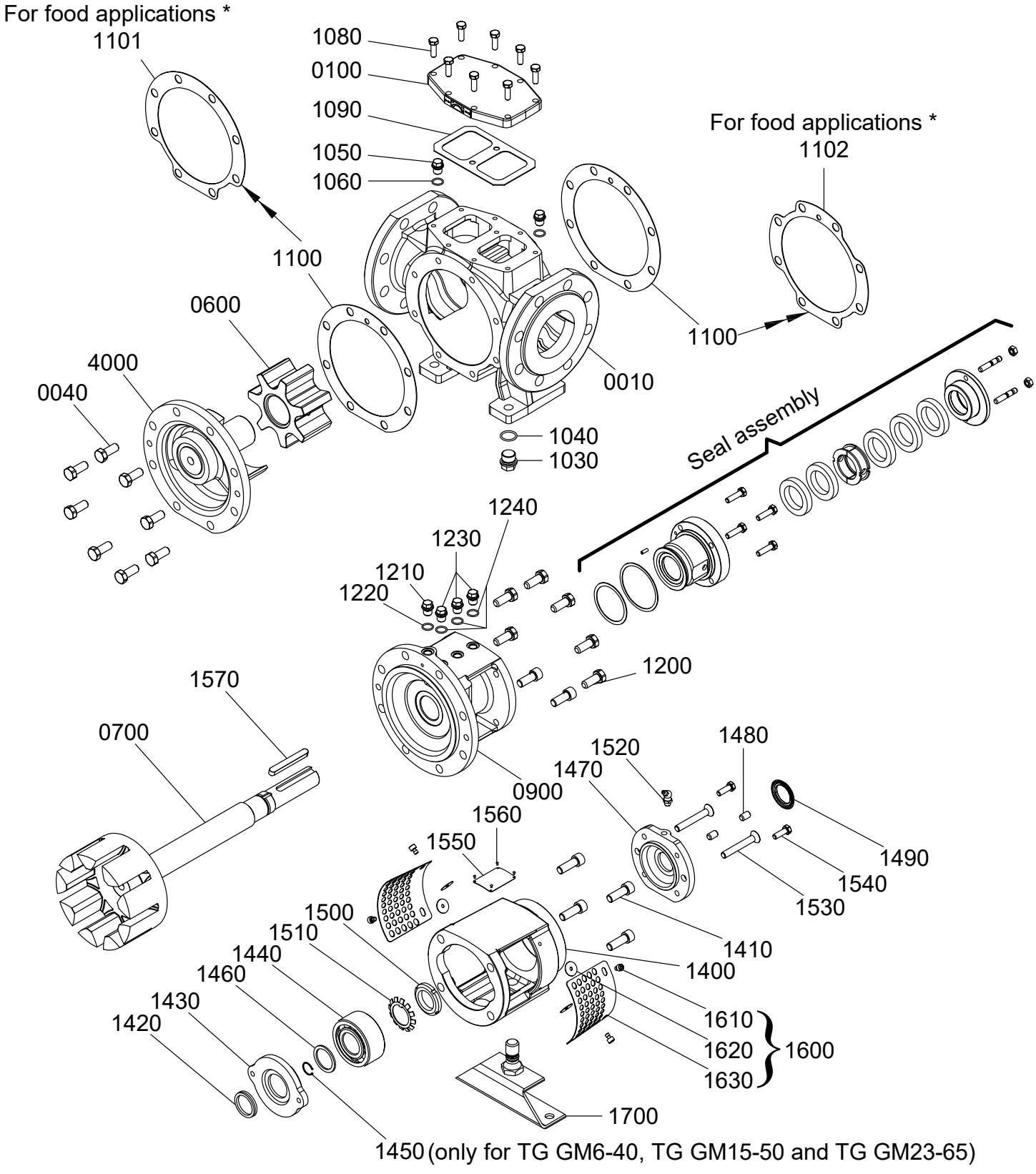

** for food applications: shape of gaskets follows the shape of the pump casing*

5.2.1 Hydraulic part

Pos.	Description	GM6-40	GM15-50	GM23-65	GM58-80	GM86-100	GM120-100	GM185-125	GM360-150	GM360-150	Preventive	Overhaul
0010	pump casing	1	1	1	1	1	1	1	1	1		
0040	tap bolt	4	6	6	8	8	8	8	8	12		
0100	top cover, complete	1	1	1	1	1	1	1	1	1		
0600	idler + bush, complete	1	1	1	1	1	1	1	1	1	x	
0700	rotor + shaft, complete	1	1	1	1	1	1	1	1	1	x	
0900	Intermediate casing complete	1	1	1	1	1	1	1	1	1	x	
1030	plug	1	1	1	1	1	1	1	1	1		
1040	sealing ring	1	1	1	1	1	1	1	1	1	x	x
1050	plug	2	2	2	2	2	2	2	2	2		
1060	sealing ring	2	2	2	2	2	2	2	2	2	x	x
1080	tap bolt	4	8	8	8	8	8	8	8	8		
1090	gasket	1	1	1	1	1	1	1	1	1	x	x
1100*	gasket	2	2	2	2	2	2	2	2	2	x	x
*1101**	*gasket*	*1*	*1*	*1*	*1*	*1*	*1*	*1*	*1*	*1*	*x*	*x*
*1102**	*gasket*	*1*	*1*	*1*	*1*	*1*	*1*	*1*	*1*	*1*	*x*	*x*
1200	tap bolt	-	6	6	6	6	6	8	8	12		
	stud bolt	4	-	-	-	-	-	-	-	-		
	allen screw	-	-	-	2	2	2	-	-	-		
1210	plug	1	1	1	1	1	1	1	1	1		
1220	sealing ring	1	1	1	1	1	1	1	1	1	x	x
1230	plug - steel	2	2	2	3	3	3	3	3	3		
1240	sealing ring	2	2	2	3	3	3	3	3	3		
1570	key	1	1	1	1	1	1	1	1	1	x	x
1580	nut	4	-	-	-	-	-	-	-	-		
4000	pump cover + idler pin, complete	1	1	1	1	1	1	1	1	1	x	

* *pos. 1100 applies for non-food pumps (2x per pump)*
pos. 1101 and 1102 applies for food pumps (1 of each per pump)

5.2.2 Bearing bracket

Pos.	Description	GM6-40	GM15-50	GM23-65	GM58-80	GM86-100	GM120-100	GM185-125	GM270-150	GM360-150	Preventive	Overhaul
1400	bearing bracket	1	1	1	1	1	1	1	1	1		
1410	allen screw	4	4	4	4	4	4	4	4	4		
1420	V-seal	1	1	1	1	1	1	1	1	1	x	x
1430	bearing cover	1	1	1	1	1	1	1	1	1		
1440	ball-bearing - steel & metal cage	1	1	1	1	1	1	1	1	2	x	x
1450	circlip	1	1	1	-	-	-	-	-	-		x
1460	support ring	1	1	1	1	1	1	1	1	1		
1470	bearing cover	1	1	1	1	1	1	1	1	1		
1480	set screw	2	2	2	2	2	2	2	2	4		
1490	V-seal	1	1	1	1	1	1	1	1	1	x	x
1500	locking nut	1	1	1	1	1	1	1	1	1		
1510	locking washer	1	1	1	1	1	1	1	1	1	x	x
1520	grease nipple	1	1	1	1	1	1	1	1	1		
1530	countersunck screw	2	2	2	2	2	2	2	2	-		
	allen screw	-	-	-	-	-	-	-	-	4		
1540	tap bolt	2	2	2	2	2	2	2	2	4		
1550	nameplate	1	1	1	1	1	1	1	1	1		
1560	rivet	4	4	4	4	4	4	4	4	4		
1600	mesh guard, complete	2	2	2	2	2	2	2	2	2		
1610	*Savetix® allen screw - st. steel*	*4*	*4*	*4*	*4*	*4*	*4*	*4*	*4*	*4*		
1620	*Savetix® washer - st. steel*	*4*	*4*	*4*	*4*	*4*	*4*	*4*	*4*	*4*		
1630	*mesh guard - st. steel*	*2*	*2*	*2*	*2*	*2*	*2*	*2*	*2*	*2*		
1700	bracket support, complete	1	1	1	1	1	1	1	1	1		

5.2.3 Flange connection options

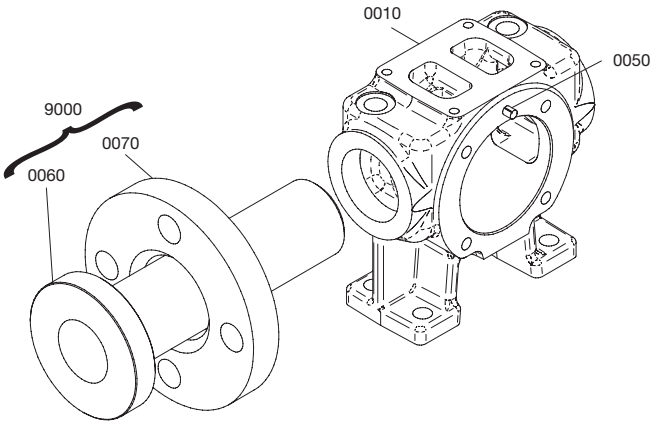

TG GM6-40

Pos.	Description	Nos./ pump	Preventive	Overhaul
0010	G1: pump casing	1		
0050	pin-stainless steel	1		
Screwed on flanges (optionally)				
9000	screw on flanges	1		
0060	collar piece	2		
0070	loose flange	2		

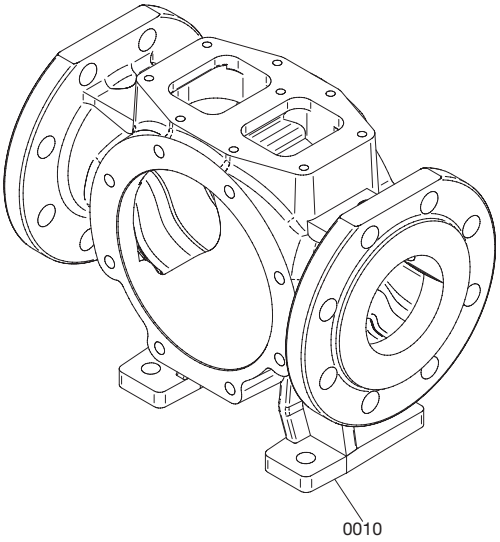

TG GM15-50 to TG GM360-150

Pos.	Description	Nos./ pump	Preventive	Overhaul
0010	pump casing	1		

5.2.4 Jacket options and electrical heating

5.2.4.1 S-jacket on pump cover

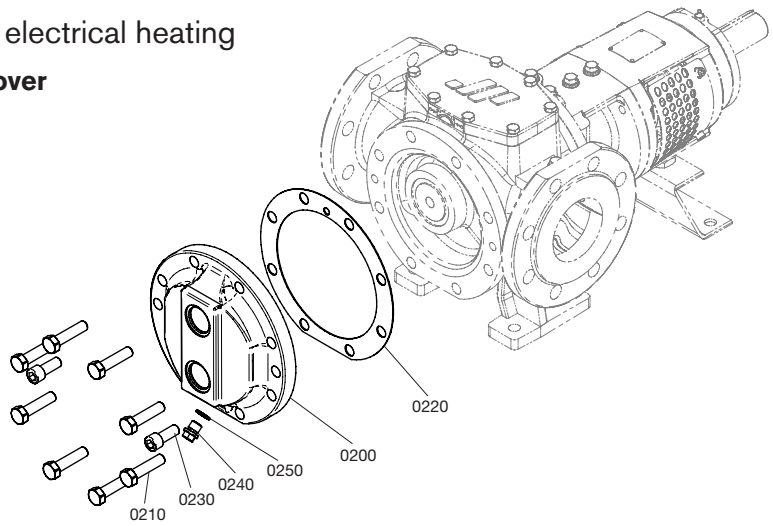

Pos.	Description	GM6-40	GM15-50	GM23-65	GM58-80	GM86-100	GM120-100	GM185-125	GM270-150	GM360-150	Preventive	Overhaul
0200	jacket cover, on front	1	1	1	1	1	1	1	1	1		
0210	tap bolt	4	6	6	8	8	8	8	8	12		
0220	gasket	1	1	1	1	1	1	1	1	1	x	x
0230	allen screw	2	2	2	2	2	2	4	4	6		
0240	plug	-	-	-	1	1	1	1	1	1		
0250	sealing ring	-	-	-	1	1	1	1	1	1	x	x

5.2.4.2 S-jacket around shaft seal

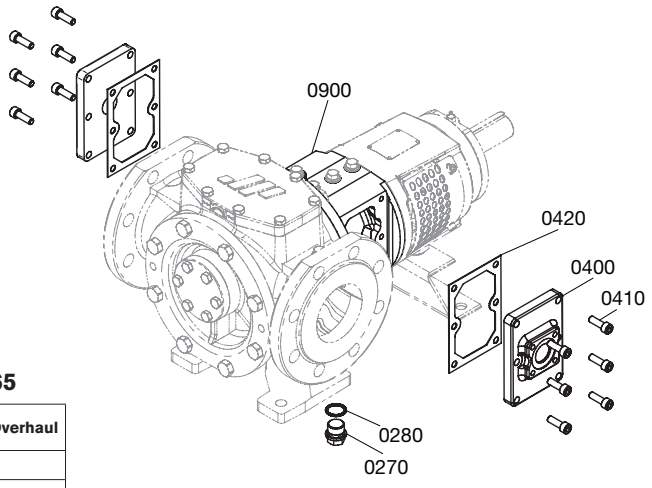

TG GM6-40, TG GM15-50, TG GM23-65

Pos.	Description	Nos./ pump	Preventive	Overhaul
0270	plug	1		
0280	sealing ring	1	x	x
0400	jacket cover	2		
0410	tap bolt	8		
0420	gasket	2	x	x
0900	Intermediate casing complete	1	x	

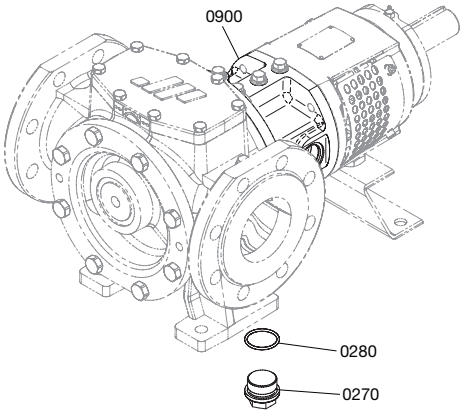

TG GM58-80, TG GM86-100, TG GM120-100, TG GM185-125, TG GM270-150, TG GM360-150

Pos.	Description	Nos./ pump	Preventive	Overhaul
0270	plug	1		
0280	sealing ring	1	x	x
0900	Intermediate casing complete	1	x	

5.2.4.3 T-jackets with flange connections on pump cover

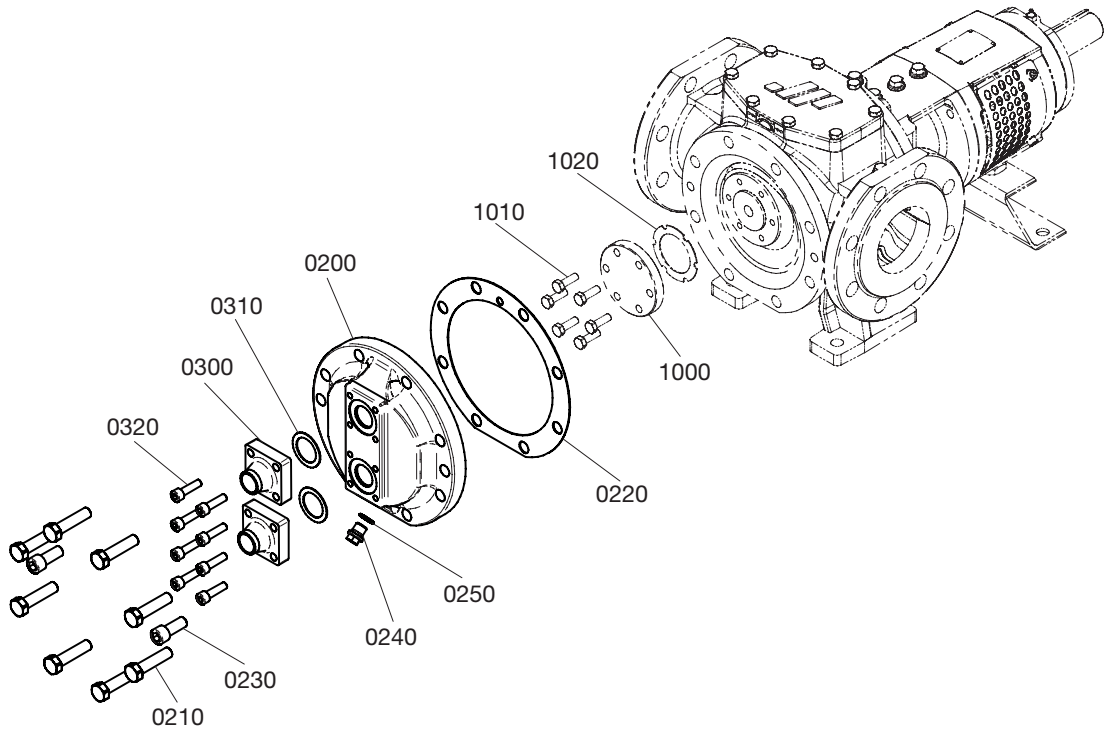

Pos.	Description	GM6-40	GM15-50	GM23-65	GM58-80	GM86-100	GM120-100	GM185-125	GM270-150	GM360-150	Preventive	Overhaul
0200	jacket cover, on front	1	1	1	1	1	1	1	1	1		
0210	tap bolt	4	-	-	8	8	8	8	8	12		
	allen screw	-	6	6	-	-	-	-	-	-		
0220	gasket	1	1	1	1	1	1	1	1	1	x	x
0230	allen screw	2	-	-	2	2	2	4	4	6		
	tap bolt	-	2	2	-	-	-	-	-	-		
0240	plug	1	1	1	1	1	1	1	1	1		
0250	sealing ring	1	1	1	1	1	1	1	1	1	x	x
0300	welding neck flange	2	2	2	2	2	2	2	2	2		
0310	gasket	2	2	2	2	2	2	2	2	2	x	x
0320	allen screw	8	8	8	8	8	8	8	8	8		
1000	pin cover	1	1	1	1	1	1	1	1	1		
1010	tap bolt	4	6	6	6	6	6	6	6	6		
1020	gasket	1	1	1	1	1	1	1	1	1	x	x

5.2.4.4 T-jackets with flange connections around shaft seal

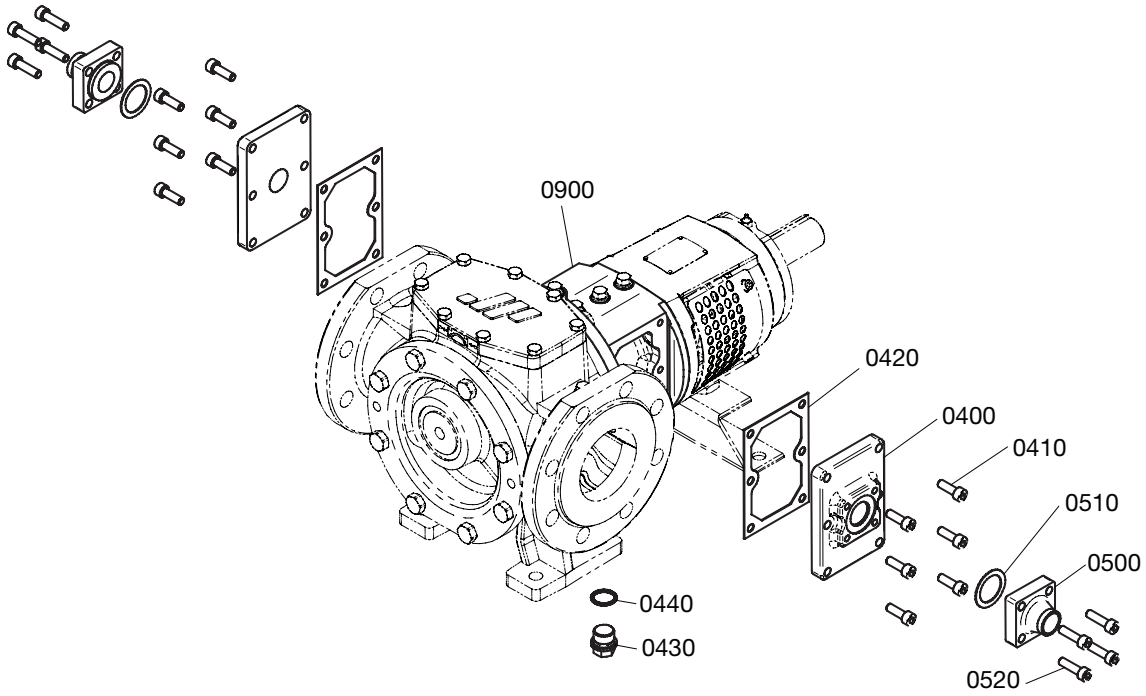

Pos.	Description	GM6-40	GM15-50	GM23-65	GM58-80	GM86-100	GM120-100	GM185-125	GM270-150	GM360-150	Preventive	Overhaul
0390	Intermediate casing	1	1	1	1	1	1	1	1	1		
0400	jacket cover, on shaft seal	2	2	2	2	2	2	2	2	2		
0410	allen screw	8	8	8	12	12	12	12	12	12		
0420	gasket	2	2	2	2	2	2	2	2	2	x	x
0430	plug	1	1	1	1	1	1	1	1	1		
0440	sealing ring	1	1	1	1	1	1	1	1	1	x	x
0500	welding neck flange	2	2	2	2	2	2	2	2	2		
0510	gasket	2	2	2	2	2	2	2	2	2	x	x
0520	allen screw	8	8	8	8	8	8	8	8	8		

5.2.4.5 Electrical heating on the pump cover (in the idler pin)

Version E1 / E2 / E3 / E4 / E5 / E6

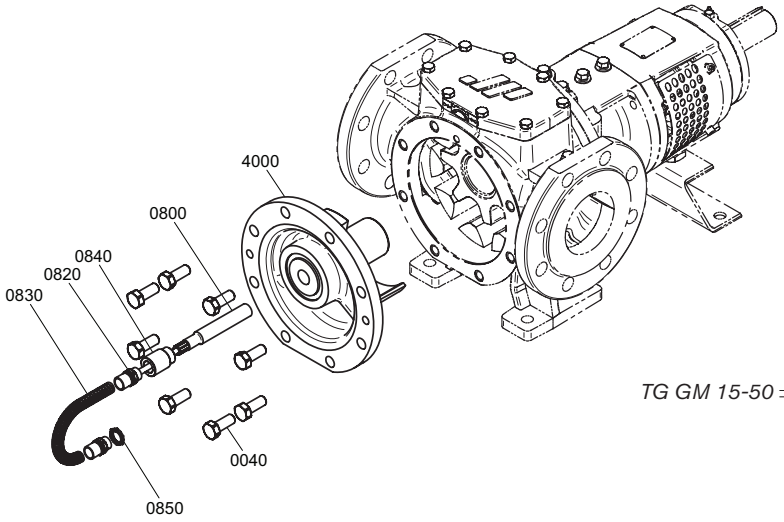

TG GM 15-50 ⇒ 270-150

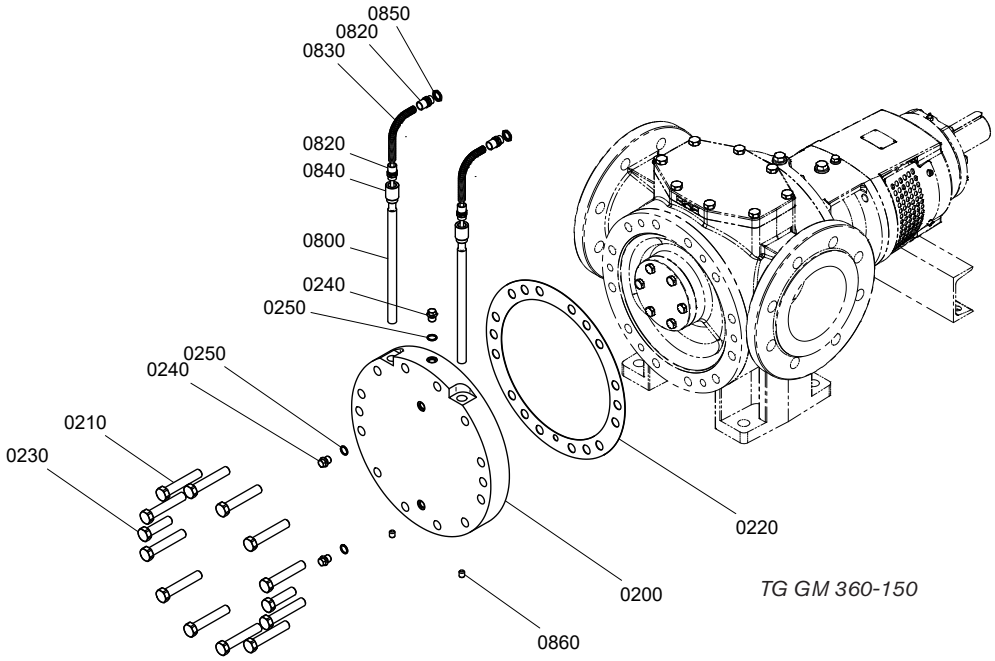

TG GM 360-150

Pos.	Description	Version	GM15-50	GM23-65	GM58-80	GM86-100	GM120-100	GM185-125	GM270-150	GM360-150	Preventive	Overhaul
0040	Tap bolt	E1 - E6	6		8					-		
0200	Heating plate pump cover	E1 - E6	-							1		
0210	Tap bolt	E1 - E6	-							12		
0220	Gasket	E1 - E6	-							1	x	x
0230	Tap bolt	E1 - E6	-							2		
0240	Plug	E1 - E6	-							3		
0250	Sealing ring	E1 - E6	-							3	x	x
0800	Electrical heating cartridge	E1	1							2		
		E2	1							2		
		E3	-		1					2		
		E4	-		1					2		
		E5	-		1					2		
		E6	-		1					2		
0820	Fitting type B PG9	E1 - E6	2							4		
0830	Flexible conduit	E1 - E6	1 x 1m							2 x 1m		
0840	Enlarger	E1 - E6	1							2		
0850	Metallic lock nut	E1 - E6	1							2		
0860	Set screw	E1 - E6	-							2		
4000	Pump cover + idler pin, complete	E1 - E6	1								x	

5.2.4.6 Electrical heating around shaft seal (in the intermediate casing)

Version E1 / E2 / E3 / E4 / E5 / E6

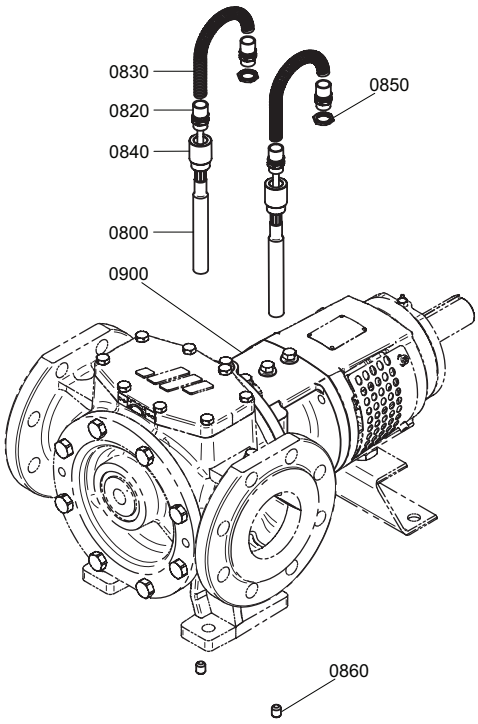

Pos.	Description	Version	GM58-80	GM86-100	GM120-100	GM185-125	GM270-150	GM360-150	Preventive	Overhaul
0020	Intermediate casing - cast iron	E1 - E6	1							
0800	Electrical heating cartridge	E1 - E6	2							
0820	Fitting type B PG9	E1 - E6	4							
0830	Flexible conduit	E1 - E6	2 x 1 m							
0840	Enlarger	E1 - E6	2							
0850	Metallic lock nut	E1 - E6	2							
0860	Set screw M10x12 DIN916 A4	E1 - E6	2							

5.2.5 Shaft seal options

5.2.5.1 Packing rings PQ with lantern ring

Pos.	Description	Nos./ pump	Preventive	Overhaul
2000	stuffing box housing	1		
2010	gasket	1	x	x
2020	lantern ring, split	1		
2030	tap bolt	4		
2040	gland	1		
2050	pin	1		
2060	stud bolt	2		
2070	nut	2		
2080	gasket	1	x	x
3000	packing ring	5	x	x

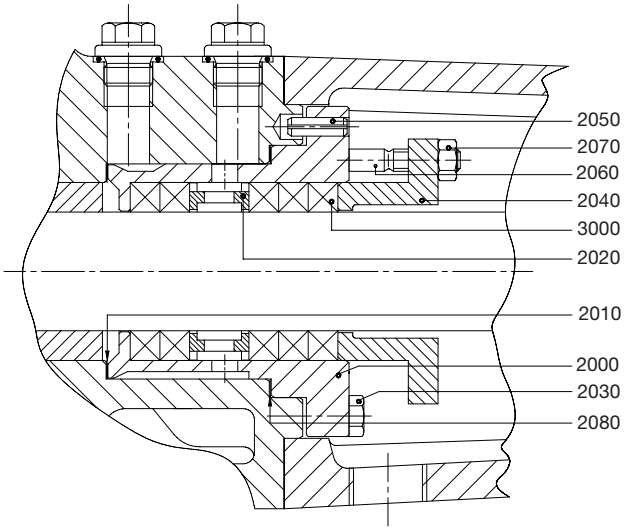

5.2.5.2 Packing rings PO without lantern ring

Pos.	Description	Nos./ pump	Preventive	Overhaul
2000	stuffing box housing	1		
2030	tap bolt	4		
2040	gland	1		
2060	stud bolt	2		
2070	nut	2		
2080	gasket	1	x	x
3000	packing ring	5	x	x

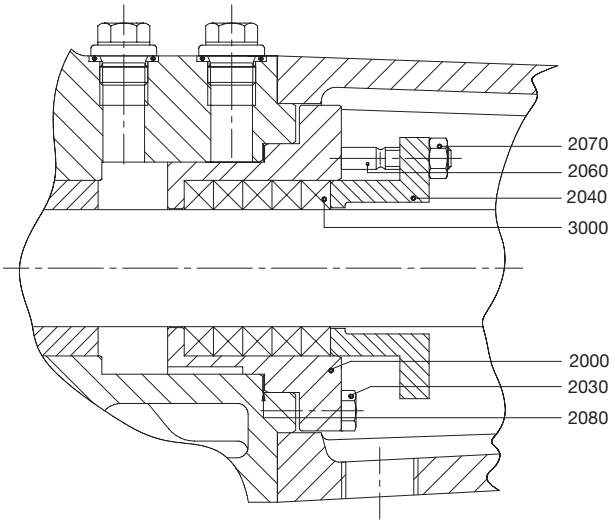

5.2.5.3 Single mechanical seal – GS

Pos.	Description	Nos./ pump	Preventive	Overhaul
2080	gasket	1	x	x
2200	seal cover	1		
2210	pin	1		
2220	tap bolt	4		
3010	mechanical seal	1	x	x
3030	set ring (optional)	1		
3040	set screw (optional)	2		

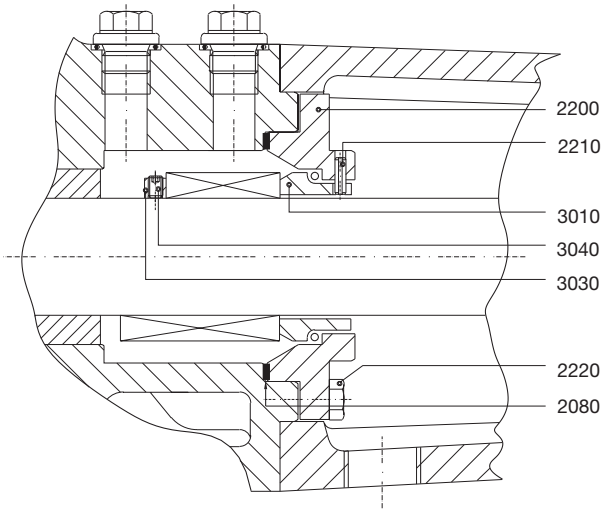

5.2.5.4 Cartridge mechanical seal – GC

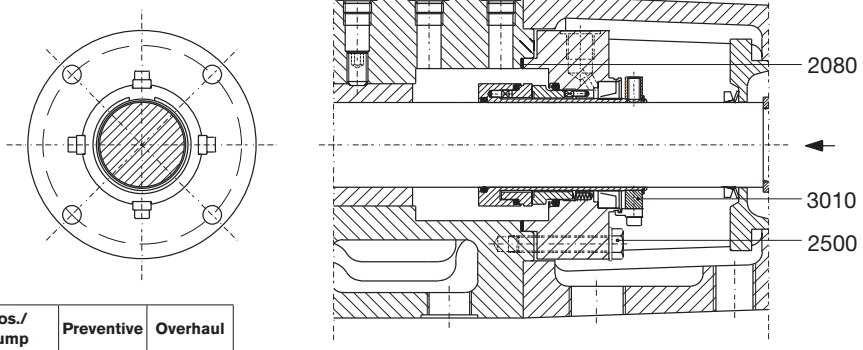

Pos.	Description	Nos./ pump	Preventive	Overhaul
2080	gasket	1	x	x
2500	tap bolt	4		
3010	cartridge mechanical seal	1	x	x

5.2.5.5 Double mechanical seal tandem – GG

Pos.	Description	Nos./ pump	Preventive	Overhaul
2080	gasket	2	x	x
2200	seal cover	1		
2210	pin	1		
2400	seal cover	1		
2410	pin	1		
2420	tap bolt	4		
3010	mechanical seal	1	x	x
3020	mechanical seal	1	x	x
3030	set ring (optional)	1		
3040	set screw (optional)	2		

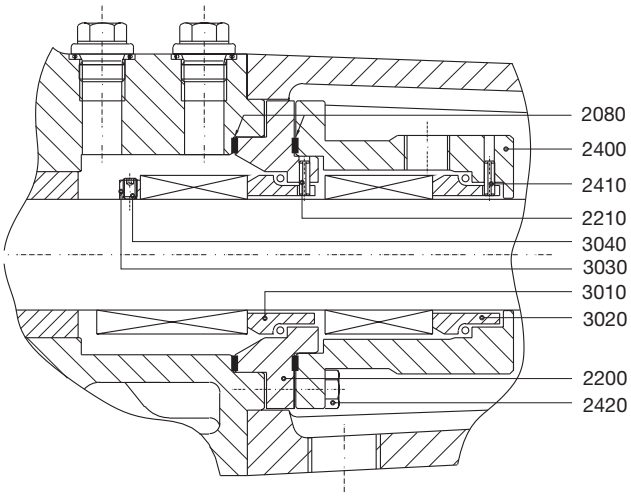

5.2.5.6 Double mechanical seal back-to-back – GD

Pos.	Description	Nos./ pump	Preventive	Overhaul
2080	gasket	2	x	x
2400	seal cover	1		
2410	pin	1		
2430	plug	2		
2600	spacer ring	1		
2610	tap bolt	4		
2620	seat housing	1		
2640	pin	1		
3010	mechanical seal	1	x	x
3020	mechanical seal	1	x	x
3050	retaining ring (optional)	1		

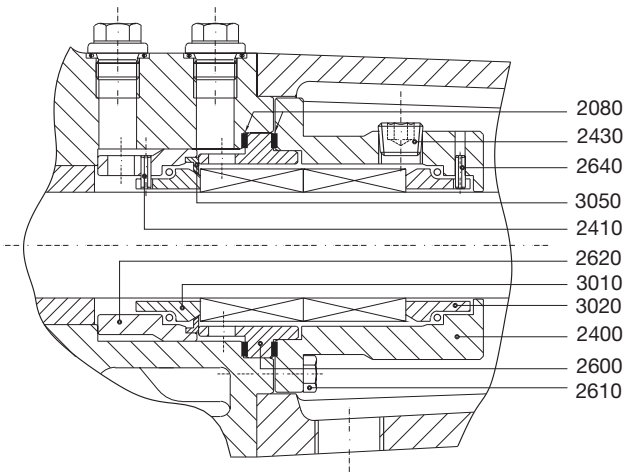

5.2.5.7 Cartridge triple lip-seal - LCT TV (LCT XX)

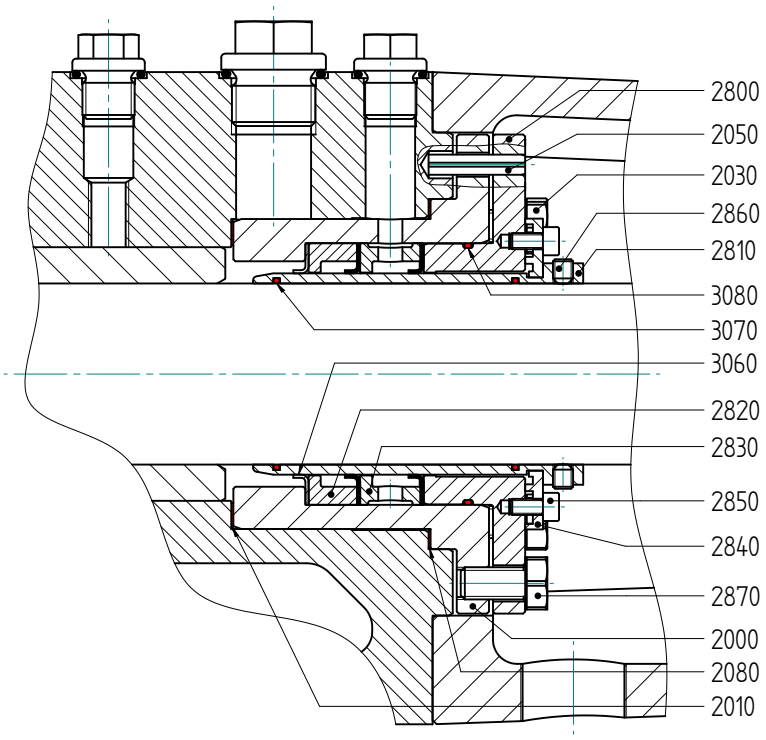

Pos.	Description	GM6-40	GM15-50 GM23-65	GM58-80 GM86-100	GM185-125 GM270-150 GM360-150	Preventive	Overhaul
2000	stuffing box	1	1				
2010	gasket	1	1			x	x
2030	tap bolt for seal	4	4				
2050	pin	1	1				
2080	gasket	1	1			x	x
2800	gland	1	1				
2810	shaft sleeve	1	1				
2820	support ring	1	1				
2830	support ring for lubrication	1	1				
2840	locking	2	4				
2850	allen screw (for locking)	2	4				
2860	set screw (for shaft sleeve)	4	4				
2870	tap bolt (for gland and box)	2	2				
3060	PTFE lip (gylon)	3	3			x	x
3070	o-ring (viton)	2	2			x	x
3080	o-ring (viton)	1	1			x	x

5.2.5.8 Reverted packing – Chocolate version

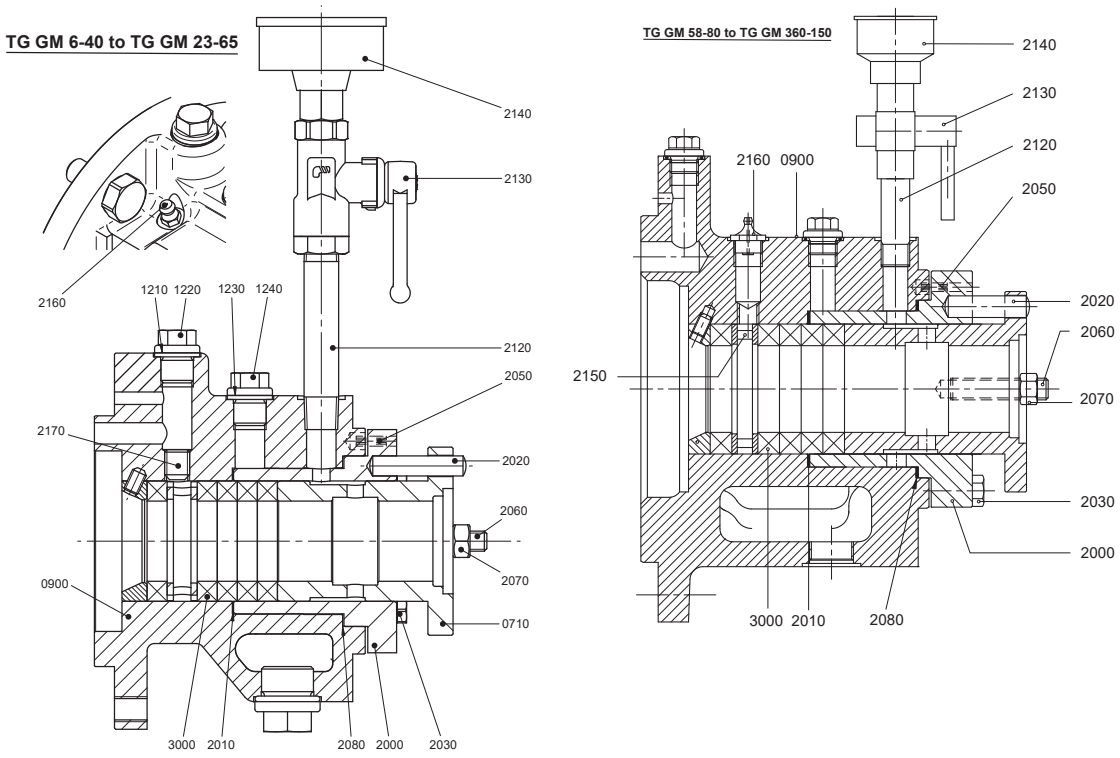

Pos.	Description	GM6-40	GM15-50 GM23-65	GM58-80 GM86-100	GM185-125 GM270-150 GM360-150	Preventive	Overhaul
0710	bush bearing	1	1	1	1		
0900	Intermediate casing complete	1	1	1	1		
2000	stuffing box housing	1	1	1	1		
2010	gasket	1	1	1	1	x	x
2020	dowel pin	1	1	1	1		
2030	tap bolt	4	4	4	4		
2050	pin	1	1	1	1		
2060	stud bolt	2	2	2	2		
2070	nut	2	2	2	2		
2080	gasket	1	1	1	1	x	x
2120	pipe nipple	1	1	1	1		
2130	check valve	1	1	1	1		
2140	grease cup	1	1	1	1		
2150	lantern ring (LR)	1	1	1	1		
2160	grease nipple	1	1	1	1		
2170	set screw	1	1	-	-		
3000	packing ring	4	5		5	x	x
	packing ring sequence	{1+LR+3}	{1+LR+4}		{2+LR+3}		

6.0 Dimensional drawings

6.1 Standard pump

6.1.1 TG GM2-25 to TG GM6-40

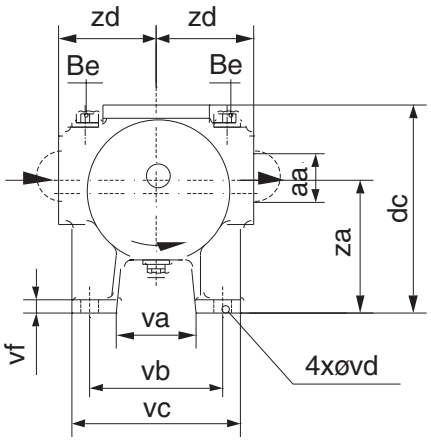

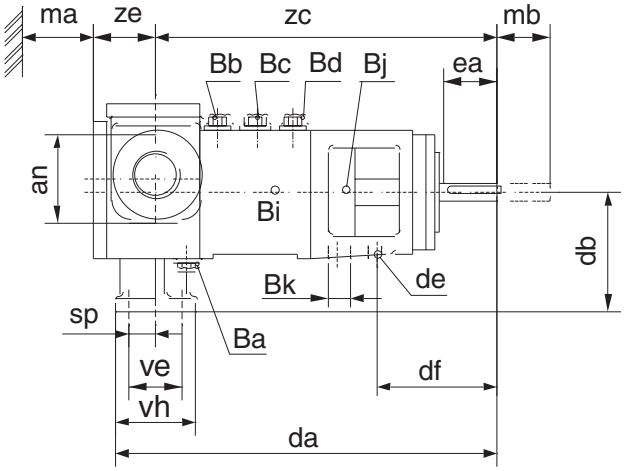

	TG GM2-25	TG GM3-32	TG GM6-40
aa	G 1	G 1 1/4	G 1 1/2
an	60		70
Ba	G 1/4		G 1/4
Bb	G 1/8		G 1/4
Bc	–		G 1/4
Bd	–		G 1/4
Be	G 1/4		G 1/4
Bi	Rp 1/8		–
Bj	Rp 1/8		Rp 1/4
Bk	Rp 3/8		Rp 3/8
da	246		312
db	80		100
dc	147		179
de	M10		M12
df	78		78
ea	34		40
eb	5 h9		6 h9
ec	16		20.5
ed	14 j6		18 j6
ef	–		M6
ma	50		60
mb	85		80
sp	17.5		22
va	51		53
vb	90		100
vc	115		127
vd	10		12
ve	35		45
vf	10		11
vh	55		70
za	90		110
zc	218		277
zd	65		80
ze	46		54

ISO/R775

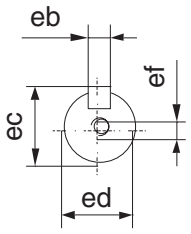

6.1.2 TG GM15-50 to TG GM360-150

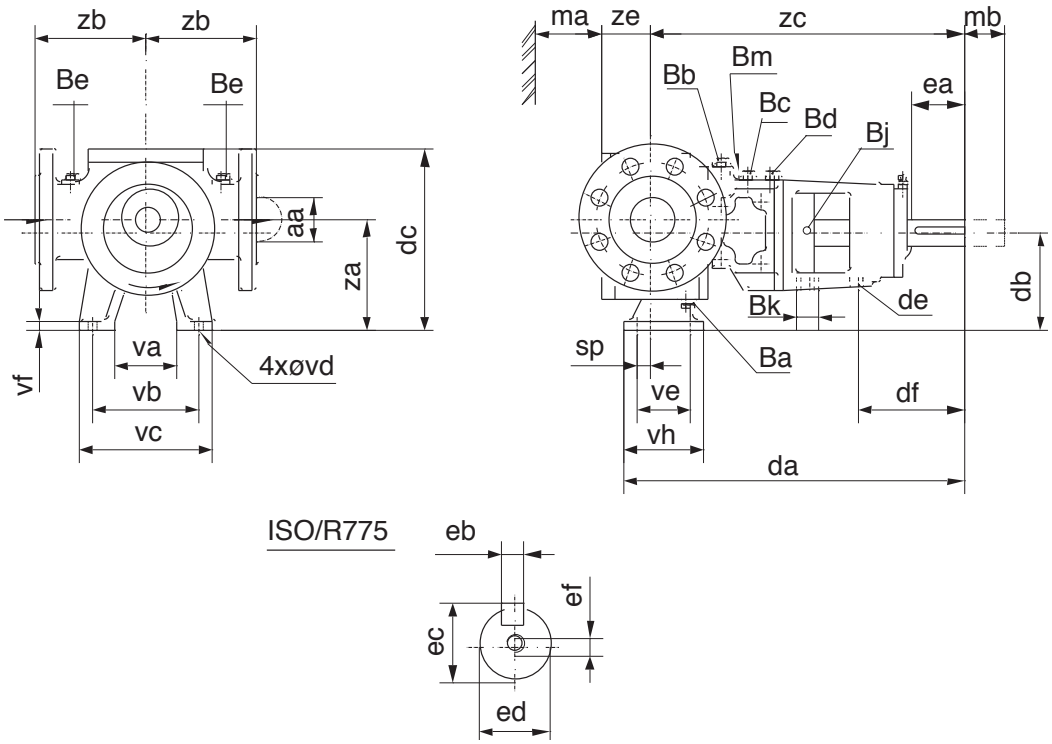

	TG GM15-50	TG GM23-65	TG GM58-80	TG GM86-100	TG GM120-100	TG GM185-125	TG GM270-150	TG GM360-150
aa	50	65	80	100	100	125	150	150
Ba	G 1/4	G 1/4	G 1/2	G 1/2	G 1/2	G 1/2	G 1/2	G 3/4
Bb	G 1/4	G 1/4	G 1/4	G 1/4	G 1/4	G 1/4	G 1/4	G 1/2
Bc	G 1/4	G 1/4	G 1/2	G 1/2	G 1/2	G 1/2	G 1/2	G 1/2
Bd	G 1/4	G 1/4	G 1/4	G 1/4	G 1/4	G 1/4	G 1/4	G 1/4
Be	G 1/4	G 1/4	G 1/4	G 1/4	G 1/4	G 1/4	G 1/4	G 1/4
Bj	Rp 1/4	Rp 1/4	Rp 1/4	Rp 1/4	Rp 1/4	Rp 1/4	Rp 1/4	Rp 1/4
Bk	Rp 1/2	Rp 1/2	Rp 3/4	Rp 3/4	Rp 3/4	Rp 3/4	Rp 3/4	Rp 3/4
Bm	–	–	G 1/4	G 1/4	G 1/4	G 1/4	G 1/4	G 1/4
da	389	400	493	526	526	633	699	774
db	112	112	160	160	160	200	225	250
dc	209	219	297	315	315	380	433	468
de	M16	M16	M20	M20	M20	M20	M20	M20
df	126	126	159	162	162	204	201	199
ea	60	60	80	80	80	110	110	110
eb	8 h9	8h9	10 h9	10 h9	10 h9	14 h9	14 h9	16 h9
ec	31	31	35	40	40	51.5	51.5	59
ed	28 j6	28 j6	32 k6	37 k6	37 k6	48 k6	48 k6	55 m6
ef	M10	M10	M12	M12	M12	M16	M16	M20
ma	75	80	105	125	140	155	225	200
mb	75	80	100	115	115	155	185	185
sp	15	26	22.5	32	32	30.5	71	85
va	70	80	100	100	100	120	140	160
vb	120	130	160	160	160	200	250	270
vc	150	160	200	200	200	260	310	330
vd	12	12	14	14	14	18	22	22
ve	60	60	90	90	90	125	150	180
vf	14	14	17	17	17	22	22	24
vh	90	90	125	125	125	170	205	230
za	125	125	180	185	185	230	263	300
zb	125	125	160	180	180	200	225	240
zc	359	359	453	476	476	580	600	664
ze	61	70	81	91	106	116	126	146

6.2 Flange connections

6.2.1 TG GM2-25 to TG GM6-40

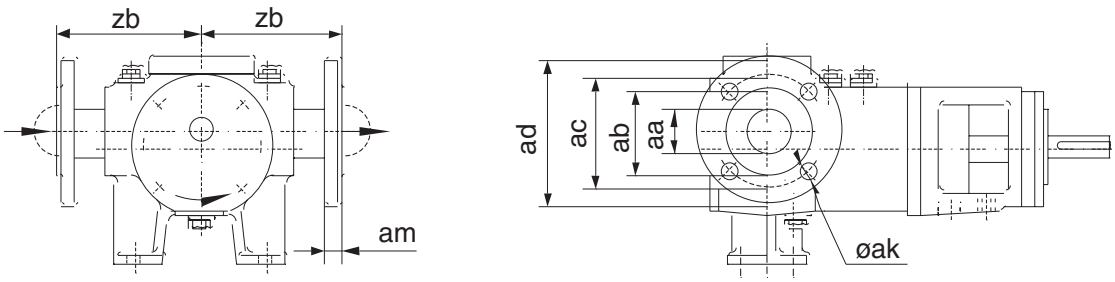

	TG GM2-25	TG GM3-32	TG GM6-40
aa	25	32	40
ab	65	76	84
ac PN16	85	100	110
ac PN20	79.5	89	98.5
ad PN16	115	140	150
ad PN20	110	120	130
ak PN16	4xd14	4xd18	4xd18
ak PN20	4xd16	4xd16	4xd16
am PN16	30	32	32
am PN20	30	32	33
zb	190	220	200

6.2.2 TG GM15-50 to TG GM360-150

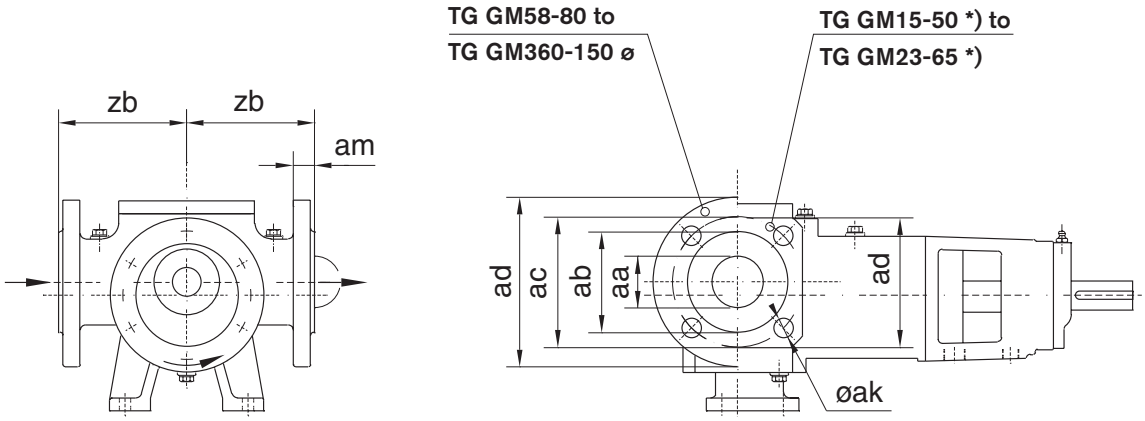

	TG GM15-50	TG GM23-65	TG GM58-80	TG GM86-100	TG GM120-100	TG GM185-125	TG GM270-150	TG GM360-150
aa	50	65	80	100	100	125	150	150
ab	100	118	135	153	153	180	212	212
ac PN16	125	145	160	180	180	210	241	241
ac PN20	120.6	139.7	152.5	190.5	190.5	216	241	241
ad	125 *)	145 *)	200	220	220	250	310	310
ak PN16	4xd18	4xd18	8xd18	8xd18	8xd18	8xd18	8xd23	8xd23
ak PN20	4xd18	4xd18	4xd18	8xd19	8xd19	8xd22	8xd23	8xd23
am	21	21	24	25	25	28	30	30
zb	125	125	160	180	180	200	225	240

**) Square flanges instead of rounded flanges*

6.3 Jackets – Electrical heating

6.3.1 TG GM2-25 to TG GM6-40

Jackets (SS) with thread connections on pump cover and around shaft seal

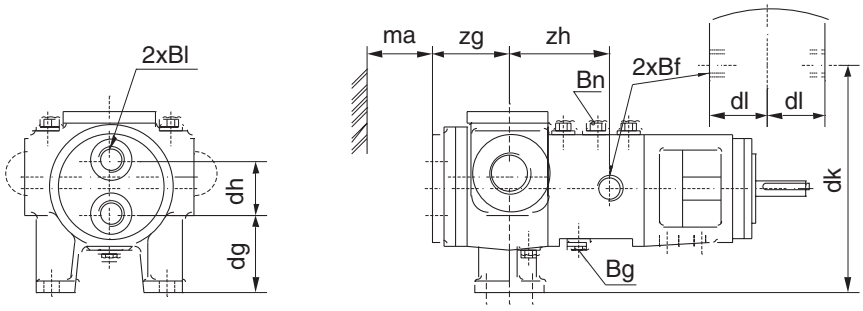

Jackets (TT) with flange connections on pump cover and around shaft seal

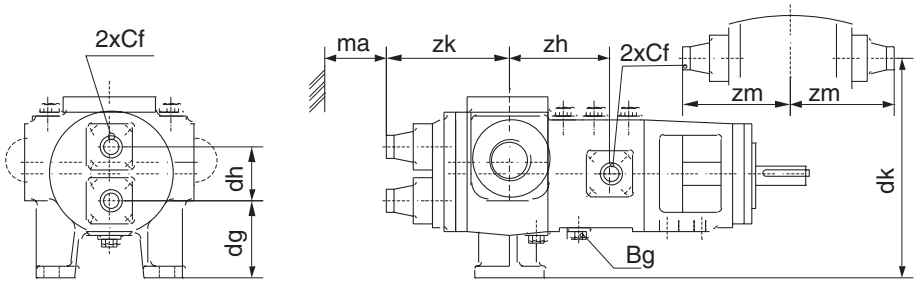

Single jacket (SO) with thread connection on pump cover
Single jacket (TO) with flange connection on pump cover

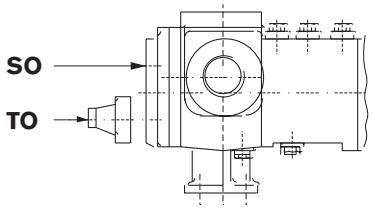

Single jacket (OS) with thread connection around shaft seal
Single jacket (OT) with flange connection around shaft seal

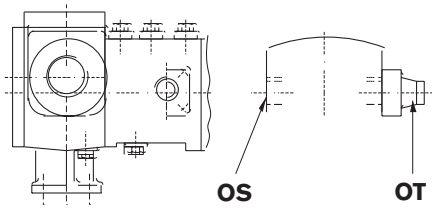

	TG GM2-25	TG GM3-32	TG GM6-40
Bf	G 1/4		G 1/4
Bg (S-jacket)	G 1/4		G 1/4
Bg (T-jacket)	–		G 1/4
Bh (T-jacket)	–		G 1/8
Bl	G 1/2		G 3/4
Bn	G 1/4		–
Cf	–		17.2x1.8
dg (S-jacket)	59		75
dg (T-jacket)	–		80
dh (S-jacket)	42		50
dh (T-jacket)	–		40
dk	80		100
dl	45		73
ma	50		60
zg (S-jacket)	61		76
zh (S-jacket)	62		88
zh (T-jacket)	–		88
zm	–		108
zk	–		116

6.3.2 TG GM15-50 to TG GM360-150

Jackets (SS) with thread connections on pump cover and around shaft seal

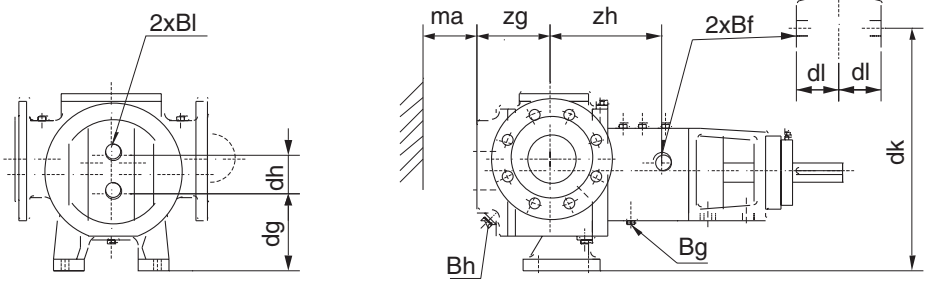

Jackets (TT) with flange connections on pump cover and around shaft seal

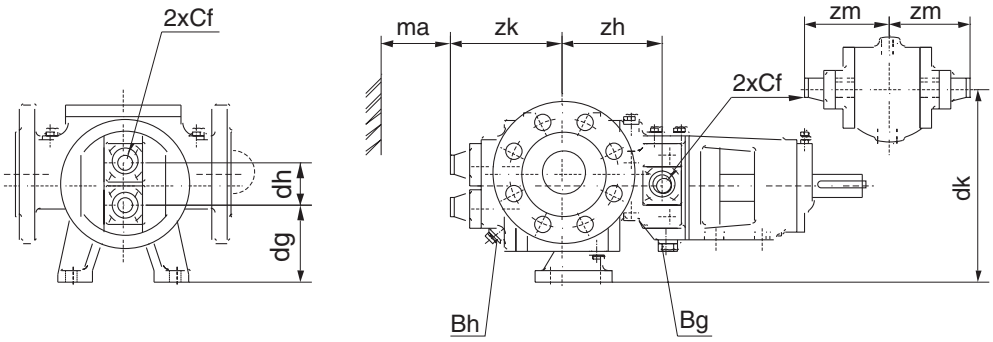

Single jacket (SO) with thread connection on pump cover
Single jacket (TO) with flange connection on pump cover

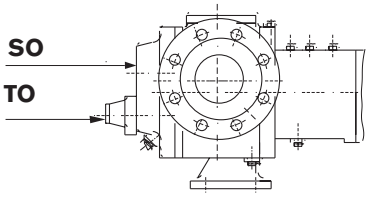

Single jacket (OS) with thread connection around shaft seal
Single jacket (OT) with flange connection around shaft seal

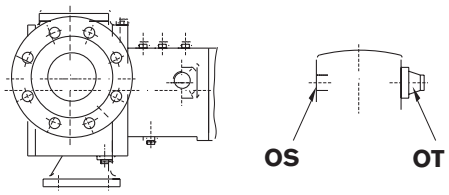

	TG GM15-50	TG GM23-65	TG GM58-80	TG GM86-100	TG GM120-100	TG GM185-125	TG GM270-150	TG GM360-150
Bf	G 1/2	G 1/2	G 1	G 1	G 1	G 1	G 1	G 1
Bg (S-jacket)	G 1/2	G 1/2	G 1	G 1	G 1	G 1	G 1	G 1
Bg (T-jacket)	G 1/2	G 1/2	G 1/2	G 1/2	G 1/2	G 1/2	G 1/2	G 1/2
Bh (S-jacket)	–	–	G 1/4	G 1/4	G 1/4	G 1/4	G 1/4	G 1/4
Bh (T-jacket)	G 1/4	G 1/4	G 1/4	G 1/4	G 1/4	G 1/4	G 1/4	G 1/4
Bl	G 3/4	G 3/4	G 1	G 1	G 1	G 1	G 1	G 1
Cf	21.3x2	21.3x2	26.9x2.3	26.9x2.3	26.9x2.3	26.9x2.3	26.9x2.3	26.9x2.3
dg (S-jacket)	87	87	121	115	115	135	155	175
dg (T-jacket)	87	84	121	115	115	135	155	175
dh (S-jacket)	50	50	78	90	90	130	140	150
dh (T-jacket)	50	56	78	90	90	130	140	150
dk	112	112	160	160	160	200	225	250
dl	61	61	79	82	82	117	117	120
ma	75	80	105	125	140	155	225	200
zg (S-jacket)	85	96	123	140	155	163	177	200
zh (S-jacket)	115	115	154	174	174	211	234	222
zh (T-jacket)	115	115	137	147	147	183	206	220
zm	99	99	128	133	133	161	161	171
zk	134	148	165	182	197	205	219	241

6.3.3 Electrical heating

Electrical heating on the pump cover (in the idler pin) and around the shaft seal (in the intermediate casing) = E..E..

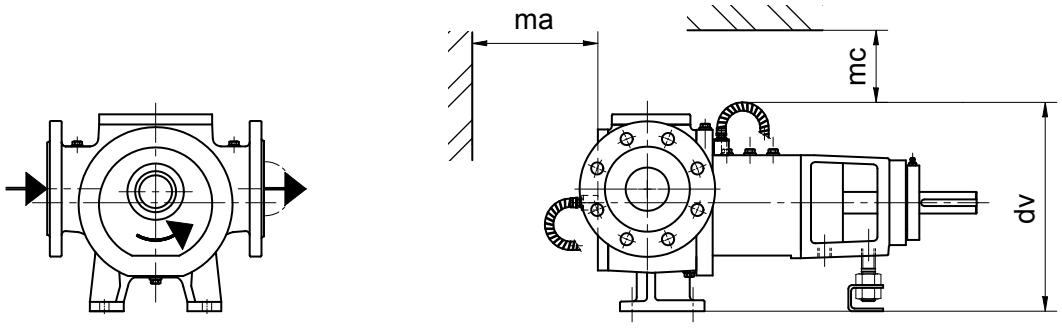

Electrical heating on the pump cover (in the idler pin) = E..O

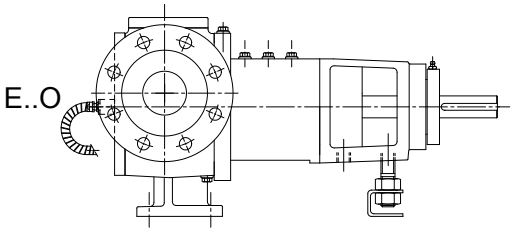

Electrical heating around the shaft seal (in the intermediate casing) = OE..

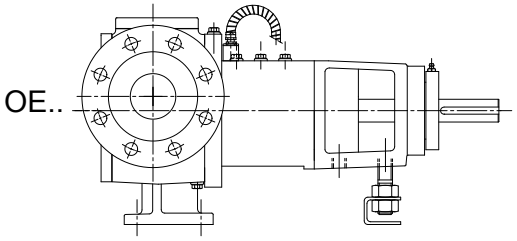

	GM15-50	GM23-65	GM58-80	GM86-100	GM120-100	GM185-125	GM270-150
ma	178	183	208	228	243	258	303
dv	-	-	333	338	338	403	428
mc	-	-	152	152	152	152	152

6.4 Safety relief valves

6.4.1 Single safety relief valve

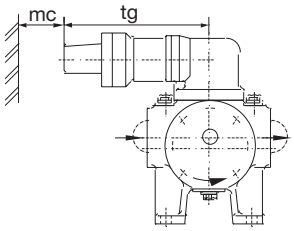

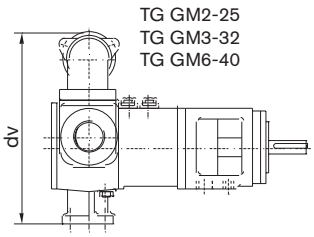

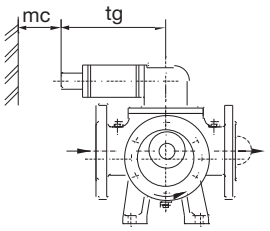

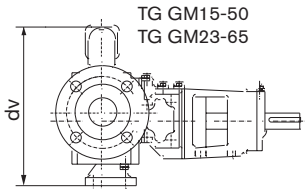

TG GM pump size	dv	mc	tg
2-25 3-32	198	40	145
6-40	230	40	145
15-50	290	50	200
23-65	300	50	200
58-80	551	70	–
86-100	577	70	–
120-100	577	70	-
185-125	642	70	–
270-150	815	80	–
360-150	850	80	–

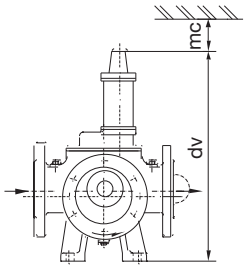

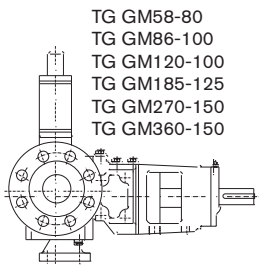

6.4.2 Double safety relief valve

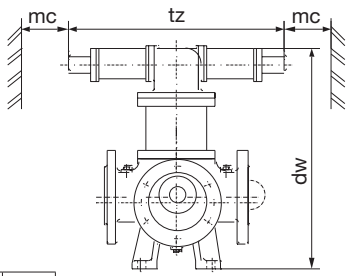

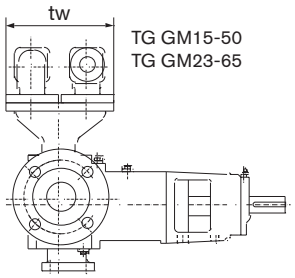

TG GM pump size	dw	mc	tv	tw	tz
15-50	391	50	–	184	400
23-65	401	50	–	184	400
58-80	662	70	178	238	–
86-100	698	70	219	300	–
120-100	698	70	219	300	–
185-125	763	70	219	300	–
270-150	965	80	270	390	–
360-150	1000	80	270	390	–

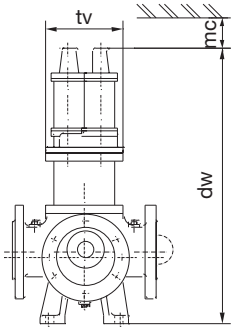

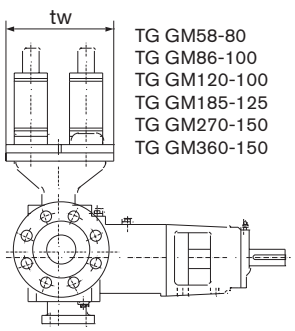

6.4.3 Heated safety relief valve (S-jacket)

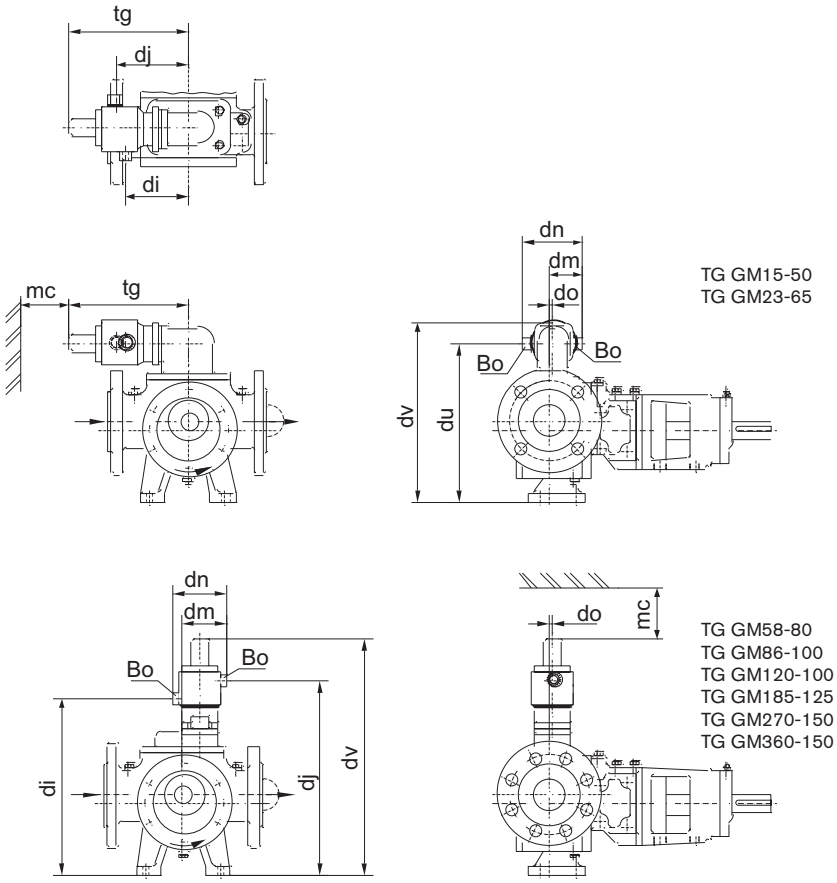

	TG GM15-50	TG GM23-65	TG GM58-80	TG GM86-100	TG GM120-100	TG GM185-125	TG GM270-150	TG GM360-150
Bo	G 1/2	G 1/2	G 1/2	G 1/2	G 1/2	G 1/2	G 1/2	G 1/2
di	101	101	418	444	444	509	583	618
dj	119	119	458	484	484	549	703	738
dm	62	59.5	98.5	103.5	103.5	103.5	135	135
dn	115	115	127	127	127	127	170	170
do	6.5	4	6	8	8	24	27	–
du	253	263	–	–	–	–	–	–
dv	290	300	551	577	577	642	815	850
mc	50	50	70	70	70	70	80	80
tg	200	200	–	–	–	–	–	–

6.4.4 Heated safety relief valve (T-jacket)

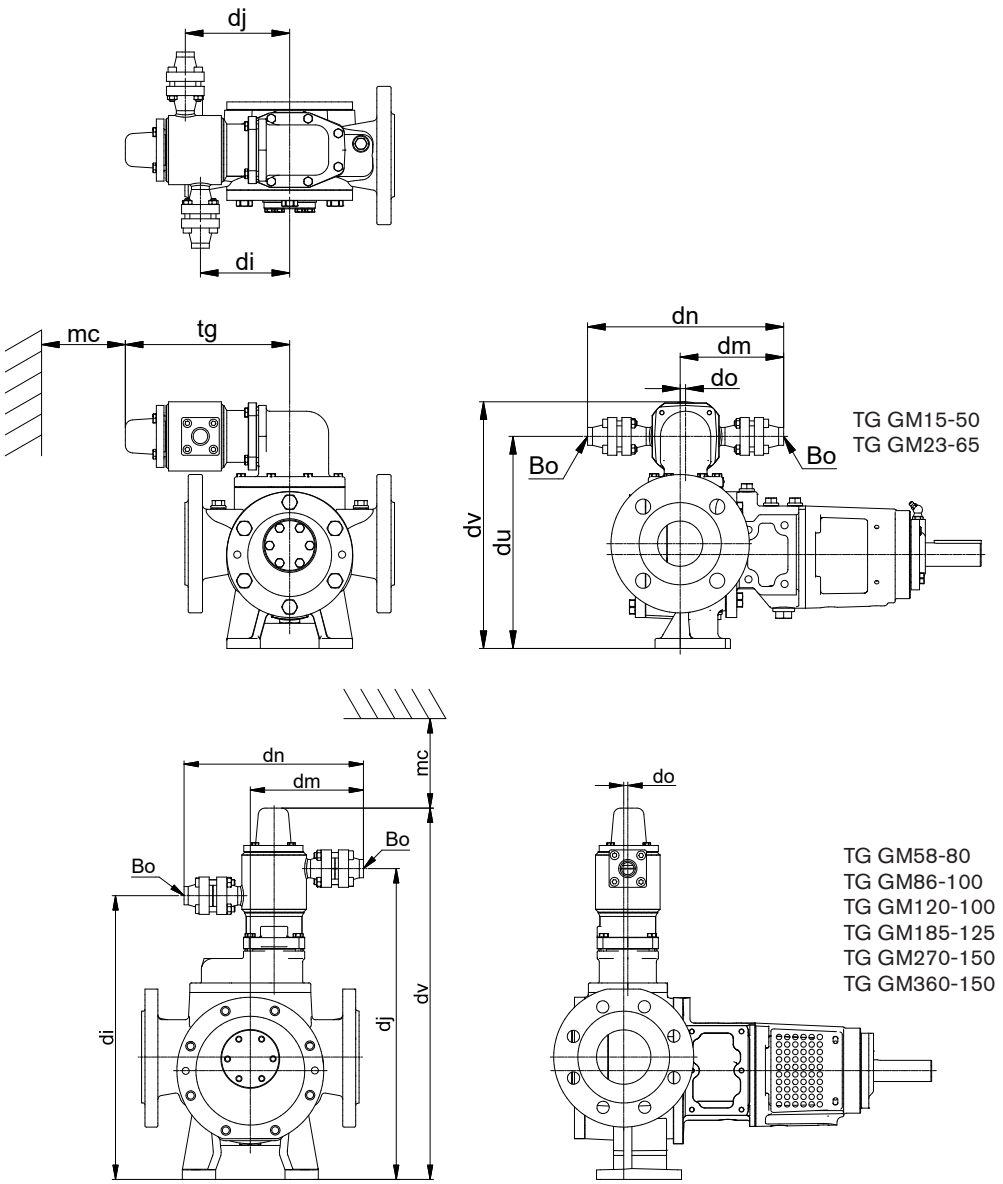

	TG GM15-50	TG GM23-65	TG GM58-80	TG GM86-100	TG GM120-100	TG GM185-125	TG GM270-150	TG GM360-150
Bo	21.3x2	21.3x2	26.9x2.3	26.9x2.3	26.9x2.3	26.9x2.3	26.9x2.3	26.9x2.3
di	101	101	418	444	444	509	583	618
dj	119	119	458	484	484	549	703	738
dm	124.5	122	167.5	172.5	172.5	172.5	204.5	204.5
dn	236	236	265	265	265	265	310	310
do	6.5	4	6	8	8	24	27	0
du	253	263	–	–	–	–	–	–
dv	290	300	550	576	576	641	814	849
mc	50	50	70	70	70	70	80	80
tg	200	200	–	–	–	–	–	–

6.4.5 Heated double safety relief valve (S-jacket)

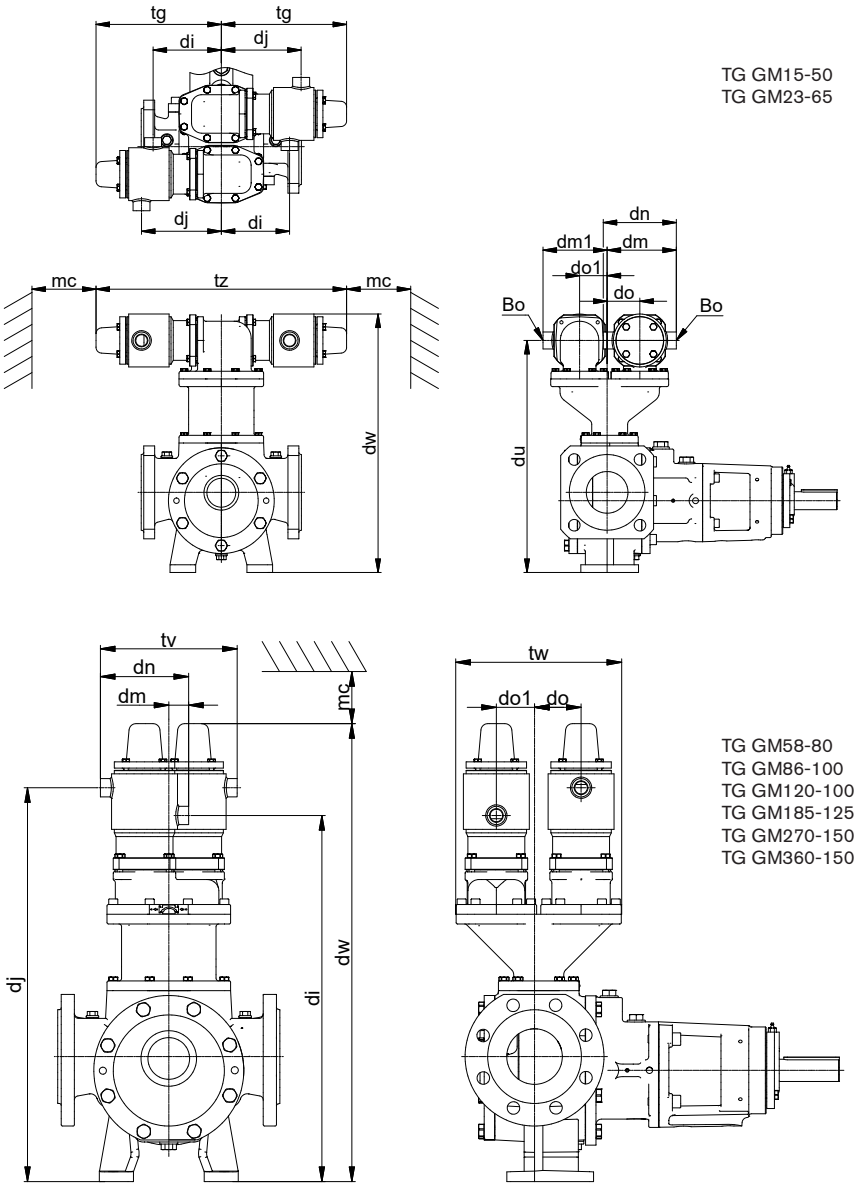

	TG GM15-50	TG GM23-65	TG GM58-80	TG GM86-100	TG GM120-100	TG GM185-125	TG GM270-150	TG GM360-150
Bo	G 1/2	G 1/2	G 1/2	G 1/2	G 1/2	G 1/2	G 1/2	G 1/2
di	101	101	529	565	565	630	734	769
dj	119	119	569	605	605	670	854	889
dm	111	108	28.5	23.5	23.5	23.5	35.5	35.5
dm1	98	100	-	-	-	-	-	-
dn	115	115	127	127	127	127	170	170
do	53.5	51	67	85.5	85.5	101.5	127	100
do1	40.5	43	55	69.5	69.5	53.5	73	100
du	354	364	-	-	-	-	-	-
dw	391	401	662	698	698	763	965	1000
mc	50	50	70	70	70	70	80	80
tg	197	197	-	-	-	-	-	-
tv	-	-	197	207	207	207	270	270
tw	-	-	240.5	302.5	302.5	302.5	390	390
tz	394	394	-	-	-	-	-	-

6.4.6 Heated double safety relief valve (T-jacket)

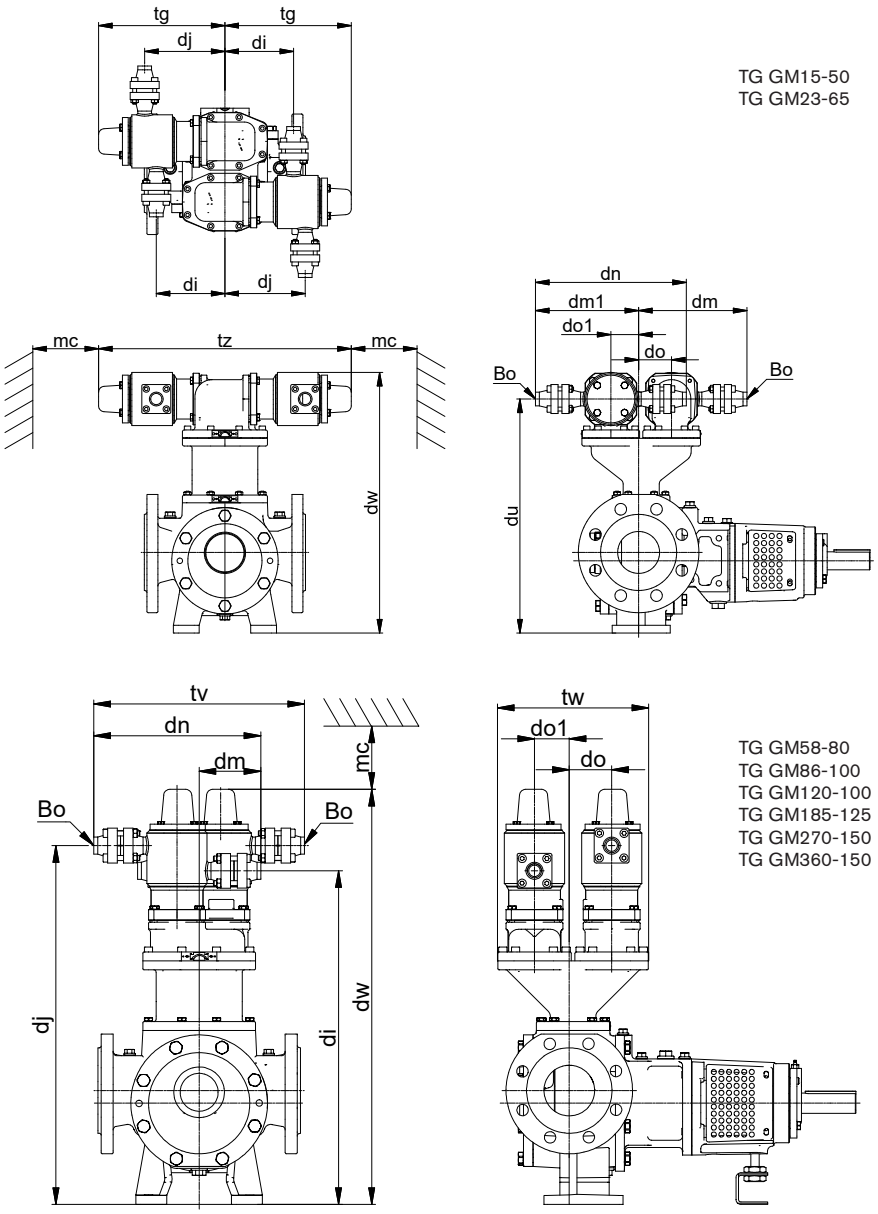

TG GM15-50
TG GM23-65

TG GM58-80
TG GM86-100
TG GM120-100
TG GM185-125
TG GM270-150
TG GM360-150

	TG GM15-50	TG GM23-65	TG GM58-80	TG GM86-100	TG GM120-100	TG GM185-125	TG GM270-150	TG GM360-150
Bo	21.3x2	21.3x2	26.9x2.3	26.9x2.3	26.9x2.3	26.9x2.3	26.9x2.3	26.9x2.3
di	101	101	529	565	565	630	734	769
dj	119	119	569	605	605	670	854	889
dm	171.5	169	97.5	92.5	92.5	92.5	105.5	105.5
dm1	158.5	161	-	-	-	-	-	-
dn	236	236	265	265	265	265	310	310
do	53.5	51	67	85.5	85.5	101.5	127	100
do1	40.5	43	55	69.5	69.5	53.5	73	100
du	354	364	-	-	-	-	-	-
dw	391	401	662	698	698	763	965	1000
mc	50	50	70	70	70	70	80	80
tg	197	197	-	-	-	-	-	-
tv	-	-	335	345	345	345	409	409
tw	-	-	240.5	302.5	302.5	302.5	390	390
tz	394	394	-	-	-	-	-	-

6.5 Bracket support

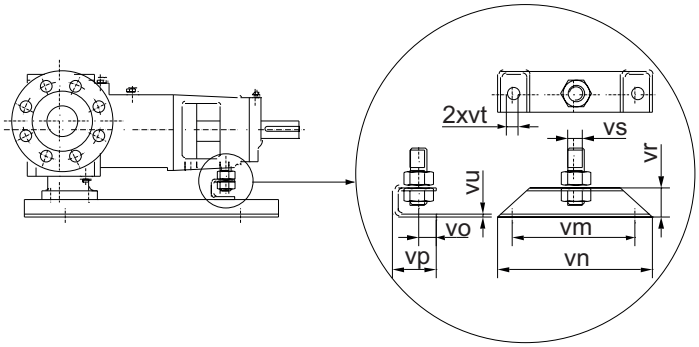

	TG GM2-25 TG GM3-32	TG GM6-40	TG GM15-50	TG GM23-65	TG GM58-80	TG GM86-100	TG GM120-100	TG GM185-125	TG GM270-150	TG GM360-150
vm	90	100	120	120	160	160	160	200	200	270
vn	118	130	150	150	195	195	195	250	250	310
vo	10	17	17	17	20	20	20	20	20	20
vp	25	40	40	40	50	50	50	50	50	50
vr	20	30	30	30	50	50	50	50	50	100
vs	M10	M12	M16	M16	M20	M20	M20	M20	M20	M20
vt	10	12	12	12	14	14	14	14	14	18
vu	2	3	3	3	4	4	4	4	4	9

6.6 Weights – Mass

	Version	Mass	Weight	TG GM2-25	TG GM3-32
Pump (without jackets)	GS	kg	daN	8	8
	PO/PQ	kg	daN	9	9
	GG & GD	kg	daN	9	9
Front-Pull out (pump cover+idler)		kg	daN	1	1
Back-Pull out (shaft+interm.cas.+bracket)		kg	daN	6	6
Screw on flanges (supplement)		kg	daN	4	5
Jackets (supplement)	SO	kg	daN	1	1
	SS	kg	daN	2	2
	OS	kg	daN	1	1
Relief valve (supplement)		kg	daN	2	2

	Version	Mass	Weight	TG GM6-40	TG GM15-50	TG GM23-65	TG GM58-80	TG GM86-100	TG GM120-100	TG GM185-125	TG GM270-150	TG GM360-150
Pump (without jackets)	GS	kg	daN	14	30	34	63	82	93	146	191	263
	PO/PQ/PR	kg	daN	15	32	36	67	86	97	152	198	270
	GG/GD/GC	kg	daN	16	34	38	70	89	100	156	203	275
Front-Pull out (pump cover+idler)		kg	daN	1.6	3	4	10	13	17	26	40	60
Back-Pull out (shaft+interm.cas.+bracket)		kg	daN	10	20	22	45	50	42	90	93	116
Screw on flanges (supplement)		kg	daN	8	–	–	–	–	–	–	–	–
Jackets (supplement)	SO	kg	daN	1	3	3	9	9	7	10	10	16
	SS	kg	daN	2	4.5	4.5	13	13	7	15	15	20
	OS	kg	daN	1	1.5	1.5	4	4	0	5	5	7
	TO	kg	daN	2.5	4.0	4.0	10	10	11	15	15	20
	TT	kg	daN	4	6	6	17	18	18	24	24	30
	OT	kg	daN	1.5	2	2	7	8	7	9	9	10
Relief valve (supplement)		kg	daN	2	5	5	7	10	10	10	23	23
Double relief valve (supplement)		kg	daN	–	13	13	24	36	36	36	64	64

SPXFLOW

Declaration of Compliance for food contact materials

Manufacturer
SPX Flow Europe Limited - Belgium
Evenbroekveld 2-6
9420 Erpe-Mere
Belgium

We hereby certify the compliance of the materials coming into contact with food during the intended use with the general requirements as of the date of this Declaration of

Regulation (EC) No 1935/2004 of 27 October 2004 on materials and articles intended to come into contact with food and repealing Directives 80/590/EEC and 89/109/EEC.

This Declaration applies to the following product(s):

Product: **TopGear internal gear pump**

Configurations:

TG GP xx-xx FD G# OS UG6 UG6 AW
TG GP xx-xx FD G# OS UR6 UR6 AW
TG GP xx-xx FD G# SS UG6 UG6 AW
TG GP xx-xx FD G# SS UR6 UR6 AW

TG GP xx-xx FD G# OS SG2 SG2 AW
TG GP xx-xx FD G# OS UG6 SG2 AW
TG GP xx-xx FD G# SS SG2 SG2 AW
TG GP xx-xx FD G# SS UG6 SG2 AW

TG GM yy-yy FD G# OO SG2 BG2 PRAW
TG GM yy-yy FD G# OO UG6 BG2 PRAW
TG GM yy-yy FD G# OO UR6 BR6 PRAW
TG GM yy-yy FD G# OO SG2 SG2 GS WV
TG GM yy-yy FD G# OO UR6 UR8 GS WV
TG GM yy-yy FD G# OO UG6 SG2 GS WV

TG GM xx-xx FD G# OS SG2 BG2 PRAW
TG GM xx-xx FD G# OS UG6 BG2 PRAW
TG GM xx-xx FD G# OS UR6 BR6 PRAW
TG GM xx-xx FD G# OS SG2 SG2 GS WV
TG GM xx-xx FD G# OS UR6 UR8 GS WV
TG GM xx-xx FD G# OS UG6 SG2 GS WV

TG GM xx-xx FD G# SS SG2 BG2 PRAW
TG GM xx-xx FD G# SS UG6 BG2 PRAW
TG GM xx-xx FD G# SS UR6 BR6 PRAW
TG GM xx-xx FD G# SS SG2 SG2 GS WV
TG GM xx-xx FD G# SS UR6 UR8 GS WV
TG GM xx-xx FD G# SS UG6 SG2 GS WV

TG H xx-xx FD R# OO UR6 BR6 PRAW
TG H xx-xx FD R# OO UR6 UR8 GS WV

TG H xx-xx FD R# SS UR6 BR6 PRAW
TG H xx-xx FD R# SS UR6 UR8 GS WV

TG BLOC xx-xx FD G# O SG2 G1 WV
TG BLOC xx-xx FD G# S SG2 G1 WV
TG BLOC xx-xx FD R# O UR4 R4 WV
TG BLOC xx-xx FD R# S UR4 R4 WV

with: **xx-xx: from 6-40 to 360-150**
yy-yy: from 6-40 to 23-65
 # : 1, 2, 3, 4 or 5

For materials made from plastic the following additional declarations apply:

- "Letter of conformance with EC1935/2004 food contact" for gaskets in Gylon® (see page 115-116)
- "Certificate of compliance with EC1935/2004 food contact" for gaskets in Clipperlon by supplier Eriks+Baudoin (see page 117)
- "Statement of EagleBurgmann on the Regulation (EC) No.1935/2004" (see page 118-120)
- "Confirmation" of mechanical seal M7N (including o-rings) by supplier EagleBurgmann (see page 121)
- "Quality confirmation" for packing rings in Buramex SF6335 by supplier EagleBurgmann (see page 122)

This Declaration shall be valid for a period of three years from the date that the pump has been shipped from our production unit.
This Declaration does not modify any contractual arrangements, in particular regarding warranty and liability.

Erpe-Mere, 01 July 2023

Frank Vander Beken
Branch manager

Garlock
an EnPro Industries family of companies

Letter of conformance

FOOD SAFE - EC1935/2004, EC 10/2011conformity

Garlock GmbH
Falkenweg1
41468 Neuss-GERMANY

We hereby confirm, our material

GYLON® blue Style 3504 and GYLON® EPIX Style 3504 EPX (printed/unprinted, sheets, cut and deformed goods) and therewith including the product series GYLON® Style 3506 (un-colored GYLON® Style 3504) as well as product series GYLON BIO-PRO®, GYLON BIO-ECO® and GYLON BIO-ASEPT®

complies with the following regulations and laws in its current version as listed below:

- European Regulation (EC) No 1935/2004* with relevant requirements of regulation (EC) No 10/2011
- Foodstuffs, Consumer Goods and Animal Feed Code (Foodstuffs and animal feed code - LFGB) with the relevant requirements of the German Consumer Goods Ordinance
- BfR memorandum on the examination of high polymers No.62
- FDA 21 CFR 177.1550 They meet ingredient and extract requirements. The fillers is listed in the Food Chemicals Codex (FCC 3rd Edition) and is considered GRAS (generally recognized as safe -21CFR170.30). The pigment is approved for use in contact with food under 21CFR 178.3297.

The overall migration as well as the specific migration are below the legal limit values and in case of an application in accordance with the specifications.

Compliance with the overall migration limits for all type of foods testing to simulant A, B and D2 has been performed.

The following Substances with a limitation and/or specification are employed in the product mentioned above:

Substance	Limitation (SML)
Tetrafluorethylen(CAS 116-14-3) not detectable	smaller 0,5 mg/kg
Cobalt (Co)(CAS 7440-48-4) not detectable	smaller 0,0008 mg/dm²
Aluminium (AL) (CAS 7429-90-5)	0,025 mg/dm²

Thus, the above mentioned material may be used safely for gaskets which are used in the production of foodstuffs and may stand in direct contact with dry, aqueous, acid and fatty foodstuffs.

**This Material also is used within process and industries, which are not rated to EC1935/2004 and only is delivered with traceability under request within ordering process.*

Subject to change without notice KU12919

Garlock GmbH
Post office box 210464
D-41430 Neuss
Falkenweg 1
D-41468 Neuss

Phone: 02131/349-0
Fax: 02131/349-222
E-Mail: garlockgmbh@garlock.com
http://www.garlock.com

CEO:
Herbert Nöckel
Robert McLean

Bank account:
Commerzbank AG Heilbronn
Konto 318 047 800
BLZ 620 400 60
BIC/Swift COBADEFF 620

HR B 7884 AG Neuss
VAT.No. DE 119354138
IBAN DE 93620400600318047800
EORI-No. DE2531925

Specification regarding the intended use:

- Kind of foodstuffs or procedure for which the material is suitable:
  - beverages: non-alcoholic and alcoholic drinks up to undenaturated ethyl alcohol
  - corn, cereal products, pastry products, biscuits, cakes and other baked goods
  - chocolate, sugar and products obtained from it, confectioneries
  - fruit, vegetables and products obtained from it
  - fats and oils
  - animal products and eggs
  - dairy products
  - Various products: vinegar, fried or roasted foodstuff, preparation for the cooking of soups, stocks (liquid, solid or powder), sauces, mustard, sandwiches, ice cream, dried foodstuffs, deep-frozen foodstuffs, concentrated extracts with an alcohol content of at least 6%, cacao, coffee, aromatic herbs, spices and condiments in a natural state and in an oily medium

- Duration and temperature of the treatment and storage when in contact with the foodstuff
  - High temperature applications with dry, aqueous and fatty foodstuffs up to 2 hours at temperatures of up to 175°C as well as long-term storage at room temperature and below

- Ratio between the surface in contact with the foodstuff and the volume, based on which the compliance of the material or article was determined.
  - 6 dm² surface / 1 kg foodstuff

This letter of conformance represents the latest technical standard and has a unlimited validity.

It will be renewed in case of significant changes in composition or production that influence the migration of the material or if new scientific evidences emerge.

Garlock GmbH
Falkenweg 1
41468 Neuss

Neuss, 09th MAI 2019 R. Kulessa STATIC SEALS

**This Material also is used within process and industries, which are not rated to EC1935/2004 and only is delivered with traceability under request within ordering process.*

Subject to change without notice KU12919

Garlock GmbH
Post office box 210464
D-41430 Neuss
Falkenweg 1
D-41468 Neuss

Phone: 02131/349-0
Fax: 02131/349-222
E-Mail: garlockgmbh@garlock.com
http://www.garlock.com

CEO:
Herbert Nöckel
Robert McLean

Bank account:
Commerzbank AG Heilbronn
Konto 318 047 800
BLZ 620 400 60
BIC/Swift COBADEFF 620

HR B 7884 AG Neuss
VAT.No. DE 119354138
IBAN DE 93620400600318047800
EORI-No. DE2531925

Declaration of Compliance

Product/material **CLIPPERLON 2135 FG**

Date of declaration 20-6-2019

To European legislation **EC 1935/2004 EU 10/2011**
To FDA regulation **CFR 21§177.1550**

We confirm that the above mentioned material is compliant to the above mentioned regulations and legislations.
Products from this material are intended for repeated use in contact with the below listed type of foods.

This material has been evaluated according to the requirement of the of the Regulation EC 1935/2004, Annex I. Materials intended to come into contact, directly or indirectly, with food.

The safety of this material has been verified by testing against the migration requirements as described in EU 10/2011 and in accordance with EN1186.

This material has been tested following the FDA regulation on extraction.

ERIKS guarantees that all products of this material are produced according the directive for GMP (Good Manufacturing Practice) 2023/2006/EC, which is part of the guideline EC 1935/2004.

The traceability of the products derived from this material is secured and the regulations for documentation and labelling protocol have been fulfilled.

Migration test results EU 10/2011 (EN1186) - test perfomed on base material

Simulant	Simulant media	Type of food	Time/temperature	Ratio S/V
A	10% Ethanol	Aqueous food	4 hours at 100°C	6
B	3% Acetic acid	Acidic food with pH <4,5	4 hours at 100°C	6
D2	Olive Oil	Free fat on the surface	2 hours at 175°C	6

Extraction test results **CFR 21§177.1550**

Test	Requirements
Extraction in ethyl acetate 2 hours	Max. 3,1 mg/dm²
Extraction in demi-water 2 hours	Max. 3,1 mg/dm²
Extraction in n-heptane 2 hours	Max. 3,1 mg/dm²
Extraction in ethanol 50% 2 hours	Max. 3,1 mg/dm²

For more information phone +31 72 514 15 14 or E-mail info@eriks.nl

This declaration is not intended as technical documentation, the suitability of this product for a specific application should be verified with ERIKS.
This declaration is valid until revocation or renewal.

ERIKS bv | P.O. Box 280 | 1800 BK ALKMAAR, The Netherlands | T +31 72 5141514 | E info@eriks.nl | www.eriks.com

EagleBurgmann

To

EagleBurgmann Germany GmbH & Co. KG
Äußere Sauerlacher Str. 6-10
D-82515 Wolfratshausen
www.eagleburgmann.com

19.11.2020

Statement on the Regulation (EC) No. 1935/2004 of the European Parliament and of the Council of 27 October 2004 on materials and articles intended to come into contact with food and repealing Directives 80/590/EEC and 89/109/EEC

The principle underlying the Regulation (EC) No. 1935/2004 is that any material or article intended to come into contact directly or indirectly with food must be sufficiently inert to preclude substances from being transferred to food in quantities large enough to endanger human health or to bring about an unacceptable change in the composition of the food or a deterioration in its organoleptic properties.

The regulation plans no declaration of compliance which directly refers to the Regulation (EC) No. 1935/2004 but it refers to specific measures for the groups of materials and articles in appendix 1. But up to now (status 13.08.2009) these specific measures do not exist for all mentioned groups of materials and articles in appendix 1 of the Regulation (EC) No. 1935/2004. Therefore it is not possible to issue a declaration of compliance according to the Regulation (EC) 1935/2004 for materials and articles for which no specific measure acc. to art. 5 exists. For such materials and articles which are not harmonized in the EC up to now the national rules (if existing) are still valid. For Germany these are the Consumer Goods Ordinance (BedGgstV) and the Foods, Consumer Goods and Feedstuffs Code (LFGB).

EagleBurgmann uses the following materials for mechanical seals and supply systems which are covered by the Regulation (EC) No. 1935/2004:
- Ceramics
- Metals and alloys
- Plastics

For the ceramic materials which EagleBurgmann uses for mechanical seals and supply systems for the usage in the production and processing of foodstuffs, namely
- Silicon carbide
- Oxide ceramic (aluminium oxide)
- Tungsten carbide

no specific measures according to the Regulation (EC) No. 1935/2004 exist.
A national rule does also not exist.

Within the above mentioned material groups there are specific materials available with one or several of the following approvals:
- FDA (Food And Drugs Administration, USA)
- KTW (derived from LFGB §31)
- WRAS (Water Regulations Advisory Scheme, Great Britain)
- USP (United States Pharmacopeia)
- DVGW - W 270

EagleBurgmann certifies herewith that the above mentioned materials do not contain any lead or cadmium.

For the metallic materials which EagleBurgmann uses for mechanical seals and supply systems for the usage in the production and processing of foodstuffs no specific measures according to the Regulation (EC) No. 1935/2004 exists. A national rule does also not exist.
Eagle Burgmann only uses stainless steels according to EN 10088, e.g. 1.4571, 1.4404, 1.4435 or superior steels or nickel alloys like Hastelloy C4. According to the statement of the Council of Europe (Guidelines on metals and alloys used as food contact materials) and the 3-A Sanitary Standard (International Association of Milk, Food an Environmental Sanitarians) these materials are best available technology for the usage in the production and processing of foodstuffs.

For the elastomers which EagleBurgmann uses in the production and processing of foodstuffs no specific measures according to the Regulation (EC) No. 1935/2004 exist, too.
For this reason for Germany the Foods, Consumer Goods and Feedstuffs Code (LFGB) is valid. From this it follows that elastomers which meet the requirements of the LFGB §31 are suitable for the usage in the production and processing of foodstuffs.
Moreover there are specific materials available within the material group of the elastomers with one or several of the following approvals:
- FDA (Food And Drugs Administration, USA):
  Title 21, CFR §177.1550 - Coated Elastomer
  Title 21, CFR §177.2400 - Elastomer - FFKM
  Title 21, CFR §177.2600 - Elastomer
- 3-A Sanitary Standard Number 18-03, Class I-IV - Elastomer
- KTW (derived from LFGB §31)
- WRAS (Water Regulations Advisory Scheme, Great Britain)
- USP (United States Pharmacopeia) - Biological reaction test, class I-VI, 3 Standard Temperatures
- ACS (Accréditation de conformité sanitaire, France)
- NSF (National Sanitation Foundation, USA)
- DVGW - W 270
- DM 174/04 of the TIFQ (Istituto per la Qualità Igienica delle Tecnologie Alimentari, Italy)

EagleBurgmann certifies herewith that the manufacturing of mechanical seals and supply systems for the usage in the production and processing of foodstuffs is in compliance with good manufacturing practice according to the Regulation (EC) No. 1935/2004.
Furthermore it is certified that under normal or foreseeable conditions of use the mechanical seals and the supply systems from EagleBurgmann do not transfer their constituents to food in quantities which could:
- endanger human health
or
- bring about an unacceptable change in the composition of the food
or
- bring about a deterioration in the organoleptic characteristics thereof.

EagleBurgmann also certifies that the traceability according to the Regulation (EC) No. 1935/2004 is ensured for mechanical seals and supply systems for the usage in the production and processing of foodstuffs.

In principle it has to be considered that in the order for mechanical seals and supply systems intended to use in the production and processing of foodstuffs the specific requirements on the materials as well as on the traceability and on the production process are specified.

EagleBurgmann Germany GmbH & Co. KG
Postfach 1260
82502 Wolfratshausen
Äußere Sauerlacher Str. 6-10
82515 Wolfratshausen
www.eagleburgmann.com
Ust.-Ident-Nr.
DE 230276848
Registergericht:
München HRA 83942
Komplementär-GmbH:
EagleBurgmann Germany Verwaltungs-GmbH
Registergericht:
München HRB 151901
Geschäftsführer
der Komplementär-GmbH:
Dr. Stefan Sacré (CEO),
Michael Stomberg (COO),
Jochen Strasser (CFO)

Yours faithfully

EagleBurgmann Germany GmbH & Co. KG

EagleBurgmann Germany GmbH & Co. KG

Postfach 1260
82502 Wolfratshausen

Äußere Sauerlacher Str. 6-10
82515 Wolfratshausen

www.eagleburgmann.com

Ust.-Ident-Nr.
DE 230276848

Registergericht:
München HRA 83942

Komplementär-GmbH:
EagleBurgmann Germany Verwaltungs-GmbH
Registergericht:
München HRB 151901

Geschäftsführer der Komplementär-GmbH:
Dr. Stefan Sacré (CEO),
Michael Stomberg (COO),
Jochen Strasser (CFO)

EagleBurgmann Germany
GmbH & Co. KG
82515 Wolfratshausen
Tel. +49 (0) 8171 – 23 0
Fax +49 (0) 8171 – 23 12 14

Bestätigung / Confirmation

EagleBurgmann bestätigt hiermit für die Materialien und Gegenstände, die bei bestimmungsgemäßen Gebrauch in Kontakt mit Lebensmitteln kommen können, die Konformität mit den allgemeinen Anforderungen der **Verordnung (EG) Nr. 1935/2004** vom 27. Oktober 2004 über Materialien und Gegenstände, die dazu bestimmt sind, mit Lebensmitteln in Berührung zu kommen.

EagleBurgmann hereby confirm the conformity of materials and articles which, when used in accordance with their intended purpose, can come into contact with food with the general requirements of **Regulation (EC) No 1935/2004** of 27 October 2004 on materials and articles intended to come into contact with food.

Gegenstand: Gleitringdichtung
Article: Mechanical seal

Materialien und Gegenstände in Kontakt mit Lebensmittel
Materials and articles in contact with food.

EagleBurgmann Bezeichnung Designation	**EN12756** (angelehnt an acc. to)	**Material-Beschreibung Description Material**	**Zulassung Approval**
Buka15 Buka16	U3 U2	Gleitwerkstoff / Face Materials: Wolframkarbid / Tungsten Carbide	FDA (GRAS = generally recognised as safe)
Buka20 Buka22 Buka27	Q2 Q1 (Q7)	Gleitwerkstoff / Face Materials: Siliziumkarbid / Silicon Carbide	FDA (GRAS)
Buko1	B	Gleitwerkstoff / Face Materials: Kohlegrafit, Kunstharz-imprägniert Carbon Graphite, Resin impregnated	FDA (GRAS) (FDA §177.2410)
E1 EL		O-Ringe, Bälge / O-Rings, Bellows: Ethylen-Propylen-Dien-Kautschuk Ethylene-Propylene-Diene-Rubber	FDA §177.2600
KL		O-Ringe / O-Rings: Perfluor-Kautschuk / Perfluorcarbon-Rubber	FDA §177.2400
V16 V26 VL		O-Ringe / O-Rings: Fluor-Kautschuk / Fluorcarbon-Rubber	FDA §177.2600
1.4571 1.4462	G (G1)	Material für Konstruktion, Federn Material of construction, springs	FDA (GRAS)

EagleBurgmann stellt über ein nach ISO 9001 zertifiziertes QM-System die Rückverfolgbarkeit für verwendete Teile und Materialien sowie eine Fertigung gemäß GMP nach Verordnung EU 2023/2006 sicher.

EagleBurgmann ensure the traceability of parts and materials used as well as a manufacturing according to GMP as per regulation EU 2023/2006 by means of a quality system certified acc. to ISO 9001.

i.A. F. Georgi
Standardization
Division Mechanical Seals
Florian.Georgi@de.eagleburgmann.com
www.eagleburgmann.com

Wolfratshausen, 04.07.2017

Diese Nachricht wird direkt vom PC ohne Unterschrift versandt. / This message will be send direct from the PC without signature.

The reproduction, distribution and utilization of this document as well as the communication of its contents to others without express authorization is prohibited. Offenders will be held liable for the payment of damages. All rights reserved in the event of the grant of a patent, utility model or design.

Weitergabe sowie Vervielfältigung dieses Dokuments, Verwertung und Mitteilung seines Inhalts sind verboten, soweit nicht ausdrücklich gestattet. Zuwiderhandlungen verpflichten zu Schadensersatz. Alle Rechte sind für den Fall der Patent-, Gebrauchsmuster- oder Geschmacksmustereintragung vorbehalten.

EagleBurgmann

Quality confirmation according to EU regulation No. 10/2011, 1935/2004, 2023/2006 and FDA

The stuffing box packing called Burgmann Buramex SF 6335 was tested in October 2012 by the Fraunhofer Institute for Process Engineering and Packaging in Freising with regard to its suitability for contact with food. The Fraunhofer Institute's final analysis shows:

1. Provided that the maximum contact area of 2.5 dm² for Buramex SF 6335 is observed, there are no concerns about the use as stuffing box packing in food processing machines up to 100 ° C. For this application described above, the safety requirements according to (FDA) 21 CFR 170.3 (i) and Article 3 of the EU Framework Regulation (EC) No. 1935/2004 can be confirmed.

2. The assessment was based on Regulation (EU) No. 10/2011. A copy of the test report (number PA/4411/12) from the Fraunhofer Institute dated November 21, 2012 with further details is available on request.

3. As part of the quality assurance system in accordance with ISO 9001: 2008, control systems and documentation are available in the production facilities that guarantee good manufacturing practice as required by EG2023 / 2006.

i.A. Stefan Danner
EagleBurgmann Germany

BURAMEX SF.DOC

Stand: 13.07.2021

NOTES

Johnson Pump®

TopGear GM

Internal Gear Pumps

SPXFLOW®
SPX FLOW EUROPE LIMITED - BELGIUM
Evenbroekveld 2-6
9420 Erpe-Mere, Belgium

P: +32 (0)53 60 27 15
F: +32 (0)53 60 27 01
E: johnson-pump@spxflow.com

www.spxflow.com/johnson-pump/

SPX FLOW reserves the right to incorporate our latest design and material changes without notice or obligation. Design features, materials of construction and dimensional data, as described in this bulletin, are provided for your information only and should not be relied upon unless confirmed in writing.

Please contact your local sales representative for product availability in your region. For more information visit www.spxflow.com.

ISSUED: 06/2023
DOCUMENT: A.0500.401 - IM-TG GM
VERSION: 07.05 EN

Copyright ©2000, 2008, 2009, 2011, 2013, 2014, 2015, 2016, 2020, 2023 SPX FLOW, Inc.