SPXFLOW®

INSTRUCTION MANUAL

APV SW4 DN25-100, 1”-4”

SINGLE SEAT AND CHANGE-OVER VALVE

SAFETY AGAINST EXPLOSION - FOR SPECIFIC ATEX-APPLICATIONS

FORM NO.: H330045 REVISION: GB-1-ATEX

READ AND UNDERSTAND THIS MANUAL PRIOR TO OPERATING OR SERVICING THIS PRODUCT.

Scan for SW4 Valve
Maintenance Video

APV®

SPXFLOW®

CE Declaration of Conformity
UKCA Declaration of Conformity

We,

DESIGN CENTER/MANUFACTURER: **SPX Flow Technology Germany GmbH**
Gottlieb-Daimler-Str. 13, D-59439 Holzwickede

MANUFACTURING FACILITY: **SPX Flow Technology Poland sp. z o.o.**
Rolbieskiego 2, 85-862 Bydgoszcz, Poland

AUTHORIZED REPRESENTATIVE:
(for UKCA)
SPX Flow Europe Ltd.
Part Ground floor, Alexander House
4 Station Road Cheadle Hulme
UK SK8 5AE United Kingdom

declare under our sole responsibility that the

APV SW4 Single Seat & Change-Over Valves DN25-DN100, 1"–4" – ATEX Zone 1

Explosion subcategory / Equipment marking:
II 2 G Ex h IIB T6…T3 Gb
0 °C ≤ Ta ≤ +55 °C

meet the requirements of the
Machinery Directive 2006/42/EC
& EN ISO 12100-2010, DIN EN ISO 14159-2008-7, DIN EN 1672-2-2009-07
ATEX Directive 2014/34/EU
& EN ISO 80079-36:2016, EN ISO 80079-37:2016
TF stored at: CSA Group Netherlands B.V, Utrechtseweg 310, 6812 AR, Arnhem, Netherlands (CE Approved Notified Body No. 2813)
(Certificate of Deposition No.: 23XT1168)

Holzwickede, Dez. 2023

ppa. B. Ariatabar
Dr.-Ing. Behdad Ariatabar, Design Center Lead - Valves

meet the requirements of the
Supply of Machinery (Safety) Regulations 2008 No. 1597 & BS harmonized standards
Equipment and Protective Systems Intended for Use in Potentially Explosive Atmospheres Regulations 2016 No. 1107 & BS harmonized standards
TF stored at: CSA Group Testing UK Ltd. Registered in England: No 2888007 Registered Office: Hawarden Industrial Park, Hawarden, CH5 3US (UKCA Approved Body No. 0518)
(Certificate of Deposition No.: 23UKXT1124)

Manchester, Dez. 2023

Mark Shanahan
Mark Shanahan, VP Finance N&H Solutions

SPXFLOW®

CE Declaration of Conformity
UKCA Declaration of Conformity

We,

DESIGN CENTER/MANUFACTURER: **SPX Flow Technology Germany GmbH**
Gottlieb-Daimler-Str. 13, D-59439 Holzwickede

MANUFACTURING FACILITY: **SPX Flow Technology Poland sp. z o.o.**
Rolbieskiego 2, 85-862 Bydgoszcz, Poland

AUTHORIZED REPRESENTATIVE:
(for UKCA)
SPX Flow Europe Ltd.
Part Ground floor, Alexander House
4 Station Road Cheadle Hulme
UK SK8 5AE United Kingdom

declare under our sole responsibility that the

APV SW4 Single Seat & Change-Over Valves DN25-DN100, 1"–4" – ATEX Zone 1
equipped with the Control Unit IECEx CU ex ia (Zone 1)

Explosion subcategory / Equipment marking:
II 2 G Ex h ia IIB T4...T3 Gb
0 °C ≤ Ta ≤ +55 °C

meet the requirements of the
Machinery Directive 2006/42/EC
& EN ISO 12100-2010, DIN EN ISO 14159-2008-7, DIN EN 1672-2-2009-07

Electromagnetic Compatibility Directive 2014/30/EU
& protection class IP 67 EN 60529, EN 61000-6-2, EN 61000-6-4, EN 60068-2-6
RoHS Directive 2011/65/EU

ATEX Directive 2014/34/EU
& EN ISO 80079-36:2016, EN ISO 80079-37:2016
& IEC 60079-0:2017, IEC 60079-11:2011 (Control Unit)
TF stored at: CSA Group Netherlands B.V, Utrechtseweg 310, 6812 AR, Arnhem, Netherlands (CE Approved Notified Body No. 2813)
(Certificate of Deposition No.: 23XT1168)

Holzwickede, Dez. 2023 — ppa. B. Ariatabar
Dr.-Ing. Behdad Ariatabar, Design Center Lead - Valves

meet the requirements of the
Supply of Machinery (Safety) Regulations 2008 No. 1597 & BS harmonized standards

Electromagnetic Compatibility Regulations 2016 No. 1091 & BS harmonized standards
Restriction of Use of Certain Hazardous Substances in Electrical and Electronic Equipment Regulation 2012 No. 3032

Equipment and Protective Systems Intended for Use in Potentially Explosive Atmospheres Regulations 2016 No. 1107 & BS harmonized standards
TF stored at: CSA Group Testing UK Ltd. Registered in England: No 2888007 Registered Office: Hawarden Industrial Park, Hawarden, CH5 3US (UKCA Approved Body No. 0518)
(Certificate of Deposition No.: 23UKXT1124)

Manchester, Dez. 2023 — Mark Shanahan
Mark Shanahan, VP Finance N&H Solutions

SPXFLOW®

CE Declaration of Conformity
UKCA Declaration of Conformity

We,

DESIGN CENTER/MANUFACTURER: **SPX Flow Technology Germany GmbH**
Gottlieb-Daimler-Str. 13, D-59439 Holzwickede

MANUFACTURING FACILITY: **SPX Flow Technology Poland sp. z o.o.**
Rolbieskiego 2, 85-862 Bydgoszcz, Poland

AUTHORIZED REPRESENTATIVE:
(for UKCA)
SPX Flow Europe Ltd.
Part Ground floor, Alexander House
4 Station Road Cheadle Hulme
UK SK8 5AE United Kingdom

declare under our sole responsibility that the

APV SW4 Single Seat & Change-Over Valves DN25-DN100, 1"–4" – ATEX Zone 1 equipped with the Control Unit CU4, CU4plus – ATEX Zone 2 Gas Applications

Explosion subcategory / Equipment marking:
II 3 G Ex h ec IIB T4...T3 Gc
0 °C ≤ Ta ≤ +55 °C

meet the requirements of the
Machinery Directive 2006/42/EC
& EN ISO 12100-2010, DIN EN ISO 14159-2008-7, DIN EN 1672-2-2009-07

Electromagnetic Compatibility Directive 2014/30/EU
& protection class IP 67 EN 60529, EN 61000-6-2, EN 61000-6-4, EN 60068-2-6
RoHS Directive 2011/65/EU

ATEX Directive 2014/34/EU
& EN ISO 80079-36:2016, EN ISO 80079-37:2016
& EN 60079-0:2018, EN 60079-7:2015/A1:2018
TF stored at: CSA Group Netherlands B.V, Utrechtseweg 310, 6812 AR, Arnhem, Netherlands (CE Approved Notified Body No. 2813)
(Certificate of Deposition No.: 23XT1168)

Holzwickede, Dez. 2023 — Dr.-Ing. Behdad Ariatabar, Design Center Lead - Valves

meet the requirements of the
Supply of Machinery (Safety) Regulations 2008 No. 1597 & BS harmonized standards

Electromagnetic Compatibility Regulations 2016 No. 1091 & BS harmonized standards
Restriction of Use of Certain Hazardous Substances in Electrical and Electronic Equipment Regulation 2012 No. 3032

Equipment and Protective Systems Intended for Use in Potentially Explosive Atmospheres Regulations 2016 No. 1107 & BS harmonized standards
TF stored at: CSA Group Testing UK Ltd. Registered in England: No 2888007 Registered Office: Hawarden Industrial Park, Hawarden, CH5 3US (UKCA Approved Body No. 0518)
(Certificate of Deposition No.: 23UKXT1124)

Manchester, Dez. 2023 — Mark Shanahan, VP Finance N&H Solutions

Content | Page

1.	**General Terms**	**10**
2.	**General Safety**	**10**
2.1	Symbols	
2.2	Safety Instructions	
3.	**Instructions for Safe Use in Potentially Explosive Areas**	**12**
3.1.	Responsibility for ATEX certification - scope of supply	
3.2.	Safety Instructions	
4.	**Identification of valves, Temperature classes, Responsibilities**	**14**
4.1.	Identification for use in ATEX environment	
4.2.	Temperature classes and permissible temperatures	
4.3.	Responsibilities	
5.	**Intended Use**	**17**
6.	**Mode of Operation**	**18**
6.1.	General terms	
7.	**Auxiliary Equipment**	**19**
7.1.	Valve position indication for Zone 1 Valve with proximity switch holder	
7.2.	Zone 1 IECEx CU ex ia Control Unit & Adapter	
7.3.	Zone 2 ATEX - CU4 / CU4plus Control Unit & Adapter	
8.	**Cleaning**	**21**
8.1.	Cleaning recommendation	
9.	**Installation and Commissioning**	**21**
9.1.	General terms	
9.2.	Welding Instructions	
10.	**Dimensions / Weights**	**23**
10.1.	SW4 Single seat valve	
10.2.	SW4 Change-over valve	
10.3.	SW4 Single seat valve with IECEx CU ex ia Control Unit (Zone 1)	
10.4.	SW4 Change-over valve with IECEx CU ex ia Control Unit (Zone 1)	
10.5.	SW4 Single seat valve with CU4/CU4plus ATEX Control Unit (Zone 2)	
10.6.	SW4 Change-over valve with CU4/CU4plus ATEX Control Unit (Zone 2)	
11.	**Technical Data**	**29**
11.1.	General data	
11.2.	Compressed air quality	
11.3.	Closing times for single seat and change-over valves	
11.4.	Valve stroke	
11.5.	Pneumatic air consumption at 6 bar control pressure	
11.6.	Calculatory product pressures	
11.7.	Kvs values	
12.	**Maintenance**	**33**
13.	**Service Instructions for Single Seat Valve**	**35**
13.1.	Dismantling from line system	
13.2.	Dismantling of wear parts (product-wetted parts)	
13.3.	Installation of seals and Assembly of valve	
13.4.	Installation of valve	
14.	**Service Instructions for Change-Over Valve**	**38**
14.1.	Dismantling from the line system	
14.2.	Dismantling of wear parts (product-wetted parts)	
14.3.	Installation of seals and assembly of valve	
14.4.	Installation of valve	
15.	**Service Instructions for Actuator**	**41**
15.1.	Maintenance of actuator	
15.2.	Installation of seals and Assembly of actuator	
15.3.	Actuator with valve position indicator	
16.	**Reconstruction of Actuator**	**42**
16.1.	Reconstruction of actuator	
16.2.	Assembly of actuator	
17.	**Assembly Tool**	**43**
17.1.	Assembly tool for seat seal	
18.	**Trouble Shooting**	**44**
19.	**Spare Parts Lists**	**44**

1. General Terms

This instruction manual applies for APV SW4 single seat and change-over valves in the nominal dimensions DN 25-100, 1"-4" for use in specific ATEX applications (according to Directive 2014/34/EU).

This instruction manual should be read carefully by the competent operating and maintenance personnel.

We point out that we will not accept any liability for damage or malfunctions resulting from the non-compliance with this instruction manual.

Descriptions and data given herein are subject to technical changes.

2. General Safety

2.1 Symbols

Caution!
The technical safety symbol draws your attention to important directions for operating safety. You will find it wherever the activities described are bearing health hazards and risks for persons and / or material assets.

Important Note!
Critical technical information.

Caution!
This symbol draws your attention to important directions which have to be observed for the operation in explosive areas.

2.2 Safety Instructions

Opening of the actuators is strictly forbidden.
Danger to health and life!

Actuators and upper shafts which are no longer used and/or are defective must be disposed in professional manner.

Defective actuators and upper shafts must be returned
to your SPX FLOW company
for their professional disposal and free of charge for you.

Please address to your local SPX FLOW company.

Actuators must be replaced after 250,000 operating cycles or after 10 years at the latest. Contact SPX FLOW or your distributor for replacement.

2. General Safety

2.2 Safety Instructions

- Never touch the valve or pipelines during hot liquid or sterilisation processes!
- Disconnect electric and pneumatic connections, e.g. before maintenance.
- Before any maintenance work, depressurize the line and cleaning system and discharge the lines if possible.
- Observe Service Instructions to ensure safe maintenance of the valve.
- Connections which are not used must be sealed by a plug!
- The safe discharge of the cleaning liquids must be ensured.
- The valves must be assembled, disassembled and reassembled only by persons who have been trained in the valves or by SPX FLOW service team members. If necessary, contact your local SPX FLOW representative.

3. Instructions for Safe Use in Potentially Explosive Areas

3.1. Responsibility for ATEX certification - scope of supply

SPX FLOW will be held responsible only for the valves supplied and selected according to the operating conditions indicated by the customer or end user and as stated in the order confirmation. If in doubt, contact your local supplier.

All other assembled equipment and devices must have a separate certification of at least the same or higher grade of protection as the valve, provided by the supplier(s) of that equipment and devices. The complete unit must be certified separately by the final assembling manufacturer and must have a separate name plate supplied by the unit manufacturer.

3.2. Safety Instructions

Installation, connection, start-up, maintenance and repair work must only be carried out by qualified personnel.

The following aspects must be observed:

- The instructions of this manual together with all relevant instructions for the components, equipment and installations installed.
- Warnings and installations fixed to the components.
- The specific regulations for and requirements to the system in which the valve is installed.
- The currently valid regional, national and international regulations.
- Any special requirement and national legislation relative to the use of flammable liquids or tools, e.g. the risk of ignition in case of spark formation, must be observed.

3. Instructions for Safe Use in Potentially Explosive Areas

It must be ensured that the group, the category and the temperature class of the valve complies with the minimum requirements of the operating environment!

Inflammable gas mixtures or dust concentrations in connection with hot, operational and movable parts of the valve can lead to serious or fatal injury!

It is recommended to perform installation, service and maintenance work in the absence of potentially explosive atmosphere in order to safeguard against unforeseen hazards. In accordance with Annex A of EN 1127-1:2019, it is allowed to use steel tools which can only cause single sparks in ATEX Zones 1 and 2 environment for such activities. In case of doubt, spark-resistant tools must be used!

Welding when necessary, shall always be carried out in the absence of explosive atmosphere. In all cases of installation, service or maintenance activity, all the energy sources of SW4 valve shall be isolated.

Conductive connection to the pipeline must be provided.
The integration into the internal potential equalisation must be guaranteed!

All non-conductive parts used in the SW4 valve follow the surface resistivity requirements of the applied harmonized standards. It is, however, recommended to clean such surface with a damp cloth and with slow rubbing motion during the presence of hazardous atmospheres.

If CIP cleaning is performed in hazardous areas, the temperatures of the cleaning liquids must comply with the temperature ranges as stated in the table 4.2 on page 10.

The standard SPX FLOW control unit series CU2, CU3, CU4 and the 8681 control top are not suited for use in ATEX environments!

4. Identification of valves, Temperature classes, Responsibilities

4.1. Identification for use in ATEX environment

4.1.1. ATEX Zone 1 - SW4 Valve with proximity switch holder

ATEX - identification:

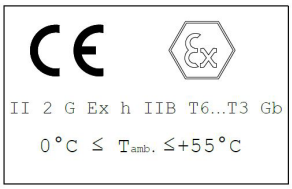

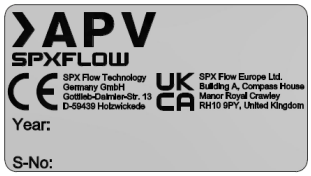

Equipment group II

Explosion subcategory / Equipment marking
II 2 G Ex h IIB T6...T3 Gb

Ambient temperature
0 °C ≤ T_{amb} ≤ +55 °C

Temperature classes T6...T3 (according to table 4.2)

4.1.2. ATEX Zone 1 - SW4 Valve with IECEx CU ex ia Control Unit

ATEX - identification:

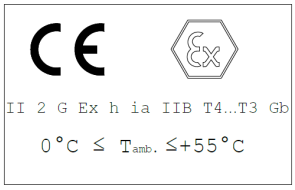

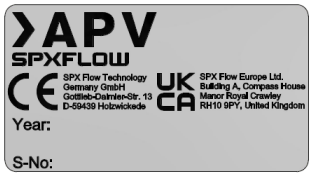

Equipment group II

Explosion subcategory / Equipment marking
II 2 G Ex h ia IIB T4...T3 Gb

Ambient temperature
0 °C ≤ T_{amb} ≤ +55 °C

Temperature classes T6...T3 (according to table 4.2)

SW4 valves equipped with a IECEx CU ex ia Control Unit can be used for temperature classes T4 & T3.

The intrinsically safe IECEx CU ex ia control unit is certified acc. to the IEC 60079-0, IEC 60079-11, admitted for use as Device of Category 2 (gas).

Reference is given to the **Instruction Manual** of the **APV Control Unit IECEx CU ex ia.**

4. Identification of valves, Temperature classes, Responsibilities

4.1.3. ATEX Zone 2 - SW4 Valve with ATEX Zone 2 CU4 / CU4plus Control Unit (Zone 2)

ATEX - identification:

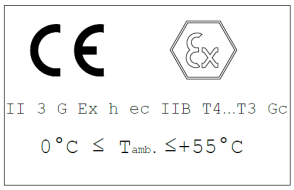

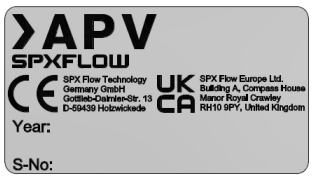

Equipment group II

Explosion subcategory / Equipment marking
II 3 G Ex h ec IIB T4...T3 Gc

Ambient temperature
0 °C ≤ Tamb ≤ +55 °C

Temperature classes T4 (according to table 4.2)

SW4 valves equipped with CU4 or CU4plus ATEX Zone 2 control units can be used for temperature class T4.

Reference is given to the **Instruction Manuals** of the APV Control Units with the different inner designs:
CU4 ATEX Zone 2 Gas Applications
CU4plus ATEX Zone 2 Gas Applications

4. Identification of valves, Temperature classes, Responsibilities

4.2. Temperature classes and permissible temperatures

The valve surface temperature mainly depends on the temperature of the process media. Select the temperature class relative to the temperature of your process media from the following table:

Media temperature	≤ 80 °C	≤ 95 °C	≤ 130 °C	up to 140 °C = Tmax. short-term
Temperature class	T6	T5	T4	T3

Under standard operating conditions the highest surface temperature will be comparably as high as the temperature of the medium plus a safety addition for local temperature increases. The valve must be completely free to the environment in order to provide for sufficient heat release.

All data (temperature classes) refer to an ambient temperature of 0°C and 55°C. If the ambient temperature is above 55°C, the temperature difference must be adjusted. In all cases, contact your responsible SPX FLOW representative!

4.3. Responsibilities

It is within the operator`s responsibility to ensure that the specified product temperatures are not exceeded and that regular inspections and maintenance are carried out to provide for proper function of the valve.

5. Intended Use

The intended use as field of application of the APV SW4 single seat and change-over valves is the shut-off of line sections in the food and beverage industries as well as in pharmaceutical and chemical applications.

Caution!
The valve is suitable for use in hazardous areas as identified on the valve according to Directive 2014/34/EU.

Its use is permissible only within the admissible pressure and temperature margins and under consideration of chemical and corrosive influences.

Any use exceeding the margins and specifications set forth, is considered to be not intended.

Any damage resulting therefrom is not within the responsibility of the manufacturer. The user will bear the full risk.

Caution! Arbitrary, structural changes at the valves may affect safety as well as the intended functionality of the valves and are not permitted.

Note! SPX FLOW APV Valves (without safety function) are allocated to Category 1 and are evaluated as per Conformity Assessment Module A of the Pressure Equipment Directive 2014/68/EU. According to Article 13, the following allocation applies for the fluids processed in the valves.
Product media – Fluid group 2 – valves in all dimensions.
CIP-cleaning liquids – Fluid group 1 – valves in the dimensions ≤ DN100/4“ can be used at temperatures up to 140 °C, valves in the dimensions > DN100/4“ at temperatures up to 100 °C.

Caution! The standard SW4 valve must not be used in aseptic applications.

SPX FLOW APV Valves are intended for use in the food and beverage industries, as well as in pharmaceutical and chemical applications.

Authorizations and External Approvals
To view the certifications for this and other innovative SPX FLOW products, visit
https://www.spxflow.com/en/apv/about-us/certifications/

It is within the responsibility of the plant operator to evaluate and verify the suitability of SPX FLOW products for the intended purpose and service conditions, as well as to determine and follow the applicable laws for the intended applications and areas of application.

6. Mode of Operation

6.1. General terms

Single seat and change-over valves APV SW4 have been developed for use in the brewing and beverage, dairy and food industries as well as for chemical and pharmaceutical applications.

The valves are designed for universal applications and stand out for their increased mechanical reliability and absolute ease of service.

The field of application of the APV SW4 valve is to shut off and to change over line sections.

- Operation by pneumatic actuator with air connection, reset by spring force.
- By different assembly of the actuator, the following designs are possible:
  NC: actuator normally closed / air-to-raise, spring-to-lower
  NO: actuator normally open / air-to-lower, spring-to-raise
- The inner parts of the actuator need not be serviced.

Single seat valve

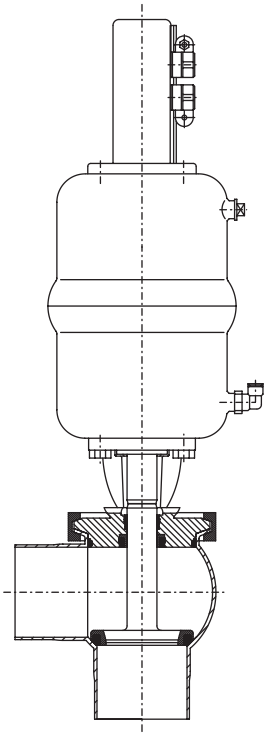

Proximity switches to signal the final position of the valve disc can be mounted to the proximity switch holder (PSH).

The use of valve position indicators which are approved for the application in explosive atmosphere is compulsary.

The use and operation of valve position indicators shall be evaluated by the operator of the installation!

Change-over valve

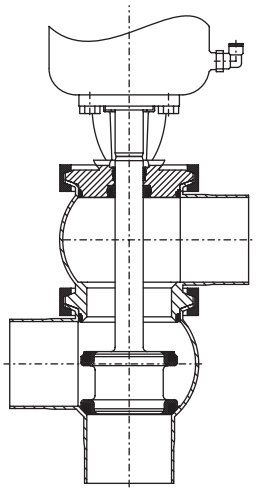

For Zone 1 the SW4 valve can be equipped with a IECEx CU ex ia control unit.

Reference is given to the **Instruction Manual** of the APV Control Unit IECEx CU ex ia.

For ATEX Zone 2 the SW4 valve can be equipped with a CU4 / CU4plus Control Unit for ATEX Zone 2 Gas Applications.

Reference is given to the **Instruction Manuals** of the APV Control Units with the different inner designs:
CU4 ATEX Zone 2 Gas Applications
CU4plus ATEX Zone 2 Gas Applications

7. Auxiliary Equipment

7.1. Valve position indication for Zone 1 Valve with proximity switch holder

Proximity switches to signal the closed and open position of the valve can be installed at the proximity switch holder.

Caution!
The use of valve position indicators which are approved for the application in explosive atmospheres is compulsory!

The use and operation of valve position indicators shall be evaluated by the operator of the installation!

fig. 7.1.

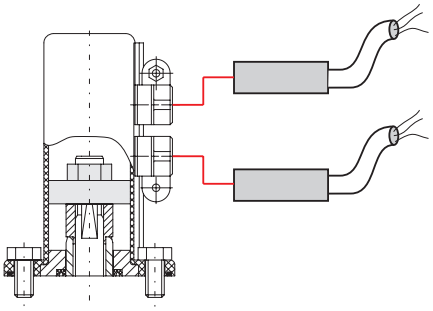

7.2. Zone 1 IECEx CU ex ia Control Unit & Adapter

Caution!
Control units for the SW4 valves for use in potentially explosive areas shall be selected in coordination with SPX FLOW. We point out that we will not accept any liability for damage, malfunctions or harm of any kind resulting from SPX FLOW - unauthorized and/or arbitrary solutions determined by the user.

fig. 7.2.

Designation	
	UF4/UFR4
Ø Air connection	**6 mm**
IECEx CU ex ia Control Unit	
IECEx CU ex ia	IECEx CU ex ia 1 S&T 24V H337798
IECEx CU ex ia Adapter	H332570

SW4 valves equipped with IECEx CU ex ia Control Unit (Zone 1) can be used for temperature classes T4 & T3. Please see table 4.2

7. Auxiliary Equipment

7.3. Zone 2 ATEX - CU4 / CU4plus Control Unit & Adapter

fig. 7.3.

Caution!
Control units for the SW4 valves for use in potentially explosive areas shall be selected in coordination with SPX FLOW. We point out that we will not accept any liability for damage, malfunctions or harm of any kind resulting from SPX FLOW - unauthorized and/or arbitrary solutions determined by the user.

The following different designs are available:

CU4 Direct Connect CU41 S DC ATEX 3 G	H345513
CU4 Direct Connect CU41 S DC M12 ATEX 3 G	H345514
CU4 AS-interface extended CU41 S AS-I ATEX 3 G	H345511
CU4 AS-interface extended CU41 S AS-I M12 ATEX 3 G	H345512

CU4plus Direct Connect CU41PLUS S DC ATEX 3 G	H345720
CU4plus Direct Connect CU41PLUS S DC M12 ATEX 3 G	H345721
CU4plus AS-interface CU41PLUS S AS-I ATEX 3 G	H345718
CU4plus AS-interface CU41PLUS S AS-I M12 ATEX 3 G	H345719
CU4plus IO-Link CU41PLUS S M12 IO-LINK ATEX 3 G	H347994

An adapter is required to install the control unit on the SW4 valve.

CU4 CU S-adapter ATEX Zone 2	**CU41-S-adapter cpl.** H320474
CU4 plus CU S-adapter ATEX Zone 2	**CU41plus-S-adapter cpl.** H333143

SW4 valves equipped with CU4 or CU4plus ATEX Zone 2 control units can be used for temperature class T4. Please see table 4.2.

8. Cleaning

8.1. Cleaning recommendation

- **Flow passages**
  The passages of the valve are cleaned by the cleaning liquid during cleaning of the connected pipelines.

  Depending on the degree and substances of soiling, cleaning liquids, times and processes must be scheduled for the individual application.

Caution!
The cleaning liquid applied must be compatible with the respective seal material.

Caution!
All non-conductive parts used in the UF4/UFR4 valve follow the surface resistivity requirements of the applied harmonized standards. It is, however, recommended to clean such surfaces with a damp cloth and with slow rubbing motion during the presence of hazardous atmospheres.

9. Installation and Commissioning

9.1. General terms

- Installation must be undertaken in such a way that liquids can drain off and should preferably be carried out in vertical position.

fig. 9.

Change-over valve

Separate connection

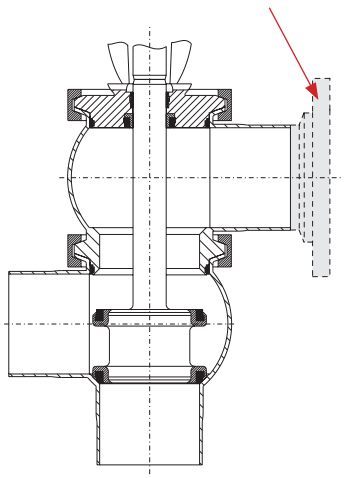

Caution!
Conductive connection to the pipeline must be provided. The integration into the internal potential equalisation must be guaranteed!

Caution!
During installation, assembly and before first startup:
Ensure that all the moving parts are free from solid particles such as dust or metal pieces. Solid particles may produce potential risks of ignition due to mechanical sparks or rise in temperature as a result of friction.

- **Single seat valve:**
  Except for the single seat valves with SWE41 and SWE42 housing configurations, the valve housing can be welded direct into the pipeline system (completely dismantable valve insert).

- **Change-over valve:**
  The upper housing is connected with the pipeline via a flange or clamp connection in detachable manner (see fig. 9.).

Note! Observe Welding Instructions 9.2.

9. Installation and Commissioning

Caution!
Before first startup:

- Actuate the valve by applying compressed air. The opening and closing processes must run smoothly.
- Check the function of the control unit or valve position indication.
- Check for possible leakages during commissioning. Replace defective seals.

9.2. Welding Instructions

Caution!
It is recommended to perform installation, service and maintenance work in the absence of potentially explosive atmosphere in order to safeguard against unforeseen hazards. In accordance with Annex A of EN 1127-1:2019, it is allowed to use steel tools which can only cause single sparks in ATEX Zones 1 and 2 environment for such activities. In case of doubt, spark-resistant tools must be used!

Welding when necessary, shall always be carried out in the absence of explosive atmosphere. In all cases of installation, service or maintenance activity, all the energy sources of the SW4 valve shall be isolated.

Shut-off valve:

- Before welding of the valve, the valve insert must be dismantled from the housing. Careful handling to avoid damage to the parts is necessary.

Change-over valve:

- Before welding of the valves, the valve insert must be dismantled from the housing. The lower housing seal must be removed. Careful handling to avoid damage to the parts is necessary.

Caution! Handle and store the valve insert carefully to avoid damaging the parts.

- Welding should only be carried out by certified welders (DIN EN ISO 9606-1) (seam quality DIN EN ISO 5817).
- The welding of the valve housings must be undertaken in such a way that the valve body is not deformed.
- The preparation of the weld seam up to 3 mm thickness must be carried out as a square butt joint without air. Consider shrinkage!
- TIG orbital welding is recommended.

Caution! After welding the valve housing or mating flanges, and after performing any work on the piping, do not operate the valves until the corresponding areas of the installation and piping have been cleaned and welding residue has been removed. If the piping is not cleaned before operation, welding residue and dirt particles can settle in the valves and cause damage to the valves and seals.

- If these welding instructions are not followed, any resulting damage will not be covered by the warranty.
- Welding directives for aseptic applications shall be drawn from the AWS/ANSI Directives and EHEDG Guidelines.

10. Dimensions / Weights

10.1. SW4 Single seat valve

Housing variants

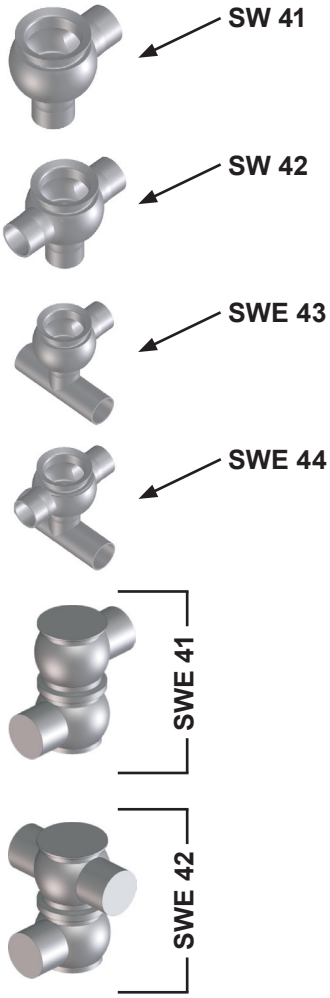

Single seat valve with valve position indication

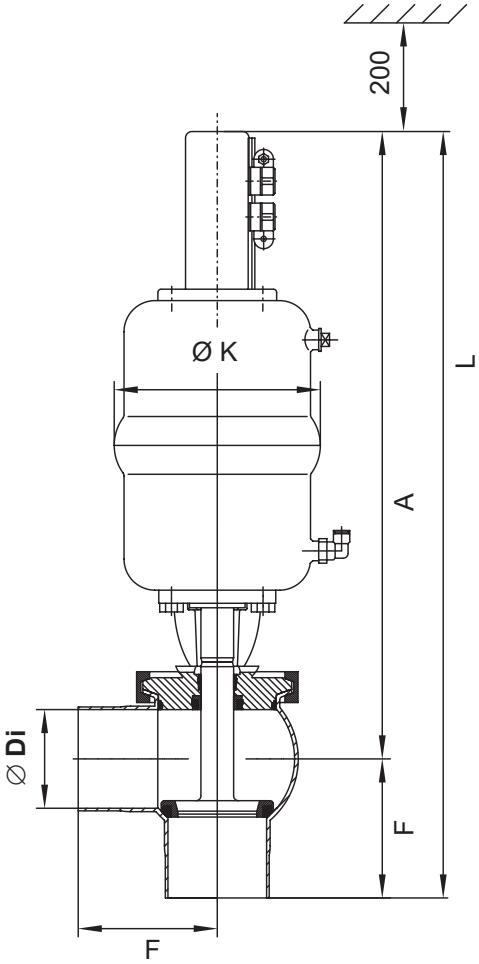

SWE 41/42

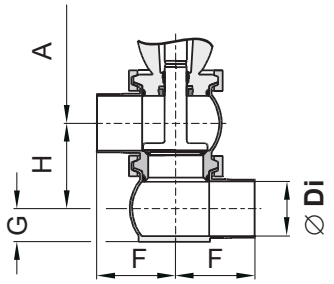

SWE 43/44

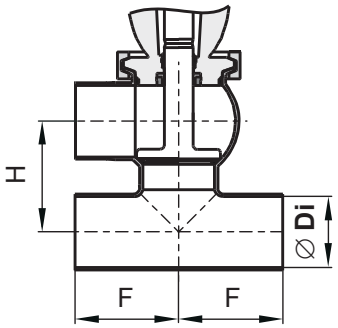

Dimensions in mm								Weights in kg
DN	**A**	**L**	**∅ Di**	**F**	**G**	**H**	**∅ K**	
25	338	388	26	50	18	54	86	4
40	342	409	38	67	24	66	86	4
50	379	451	50	72	32	78	126	6
65	387	472	66	85	40	94	126	6
80	440	438	81	98	47,5	109	189	12
100	450	561	100	111	57	128	189	14
Inch								
1"	336	386	22,6	50	16,3	50,6	86	4
1,5"	340	407	34,9	67	22,4	62,9	86	4
2"	378	450	47,6	72	30,8	75,6	126	6
2,5"	384	469	60,3	85	37,2	88,3	126	6
3"	435	525	72,9	90	43,5	100,9	189	12
4"	448	559	97,6	111	55,8	125,6	189	14

10. Dimensions / Weights

10.2. SW4 Change-over valve

Housing variants

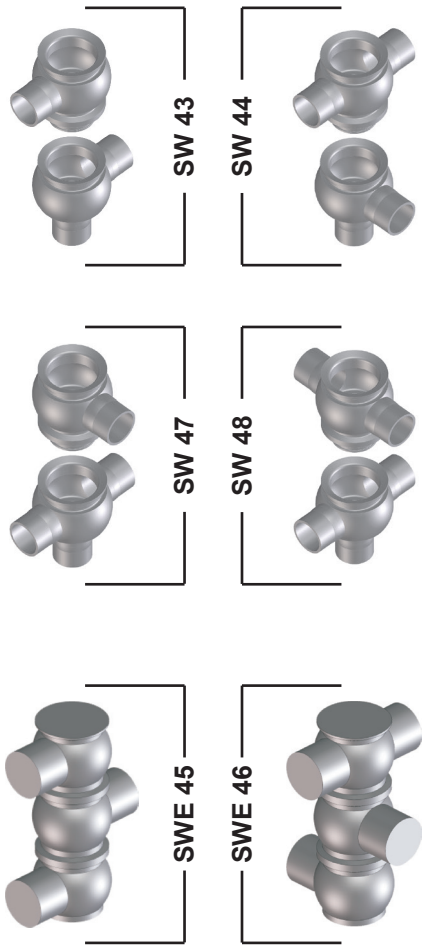

Change-over valve with valve position indication

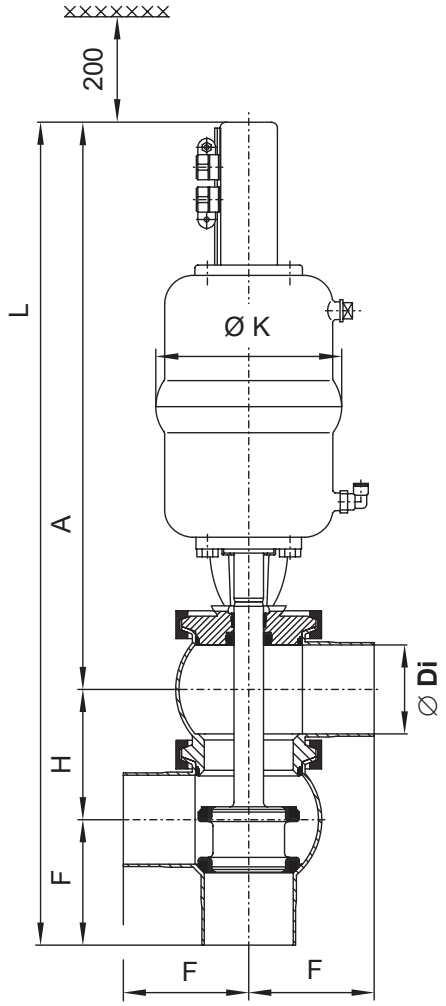

SWE 45/46

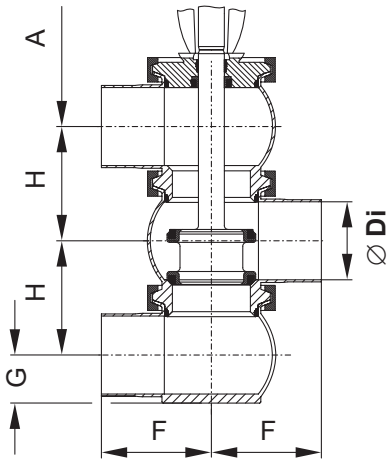

Dimensions in mm								Weight in kg
DN	**A**	**L**	**∅ Di**	**F**	**G**	**H**	**∅ K**	
25	338	442	26	50	18	54	86	6
40	342	475	38	67	24	66	86	6
50	379	529	50	72	32	78	126	8
65	387	566	66	85	40	94	126	8
80	440	647	81	98	47,5	109	189	15
100	450	689	100	111	57	128	189	17
Inch								
1"	336	437	22,6	50	16,3	50,6	86	6
1,5"	340	470	34,9	67	22,4	62,9	86	6
2"	378	526	47,6	72	30,8	75,6	126	8
2,5"	384	557	60,3	85	37,2	88,3	126	8
3"	435	626	72,9	90	43,5	100,9	189	15
4"	448	685	97,6	111	55,8	125,6	189	17

10. Dimenions/Weights

10.3. SW4 Single seat valve with IECEx CU ex ia Control Unit (Zone 1)

housing variants

SW 41

SW 42

SWE 43

SWE 44

SWE 41

SWE 42

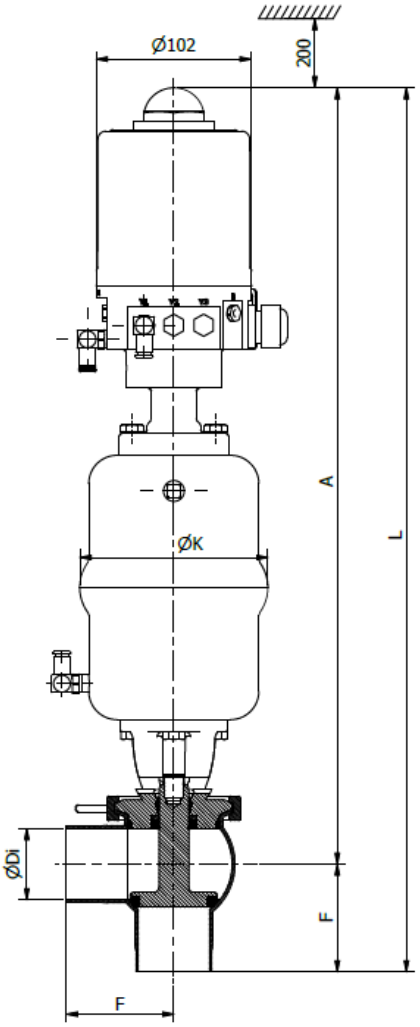

SWE 41/42

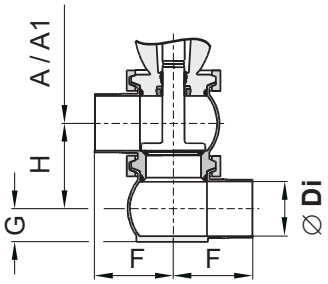

SWE 43/44

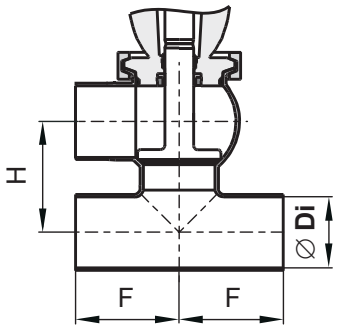

Dimensions in mm										Weight in kg
DN	**A**	**L**	**∅ Di**	**F**	**G**	**H**	**∅ K**	**A1**	**L1**	
25	475	525	26	50	18	54	86	338	388	8
40	479	546	38	67	24	66	86	342	409	8,5
50	516	588	50	72	32	78	126	379	451	10,5
65	524	609	66	85	40	94	126	387	472	11
80	577	675	81	98	47,5	109	189	440	438	17,5
100	587	698	100	111	57	128	189	450	561	19
Inch										
1"	473	523	22,6	50	16,3	50,6	86	336	386	8
1,5"	477	544	34,9	67	22,4	62,9	86	340	407	8,5
2"	515	587	47,6	72	30,8	75,6	126	378	450	10,5
2,5"	521	606	60,3	85	37,2	88,3	126	384	469	11
3"	572	662	72,9	90	43,5	100,9	189	435	525	17,5
4"	585	696	97,6	111	55,8	125,6	189	448	559	19

10. Dimensions/Weights

10.4. SW4 Change-over valve with IECEx CU ex ia Control Unit (Zone 1)

housing variants

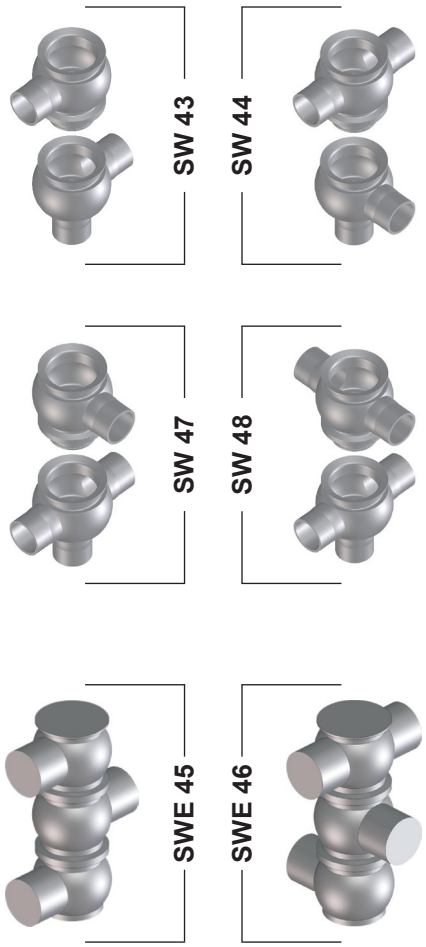

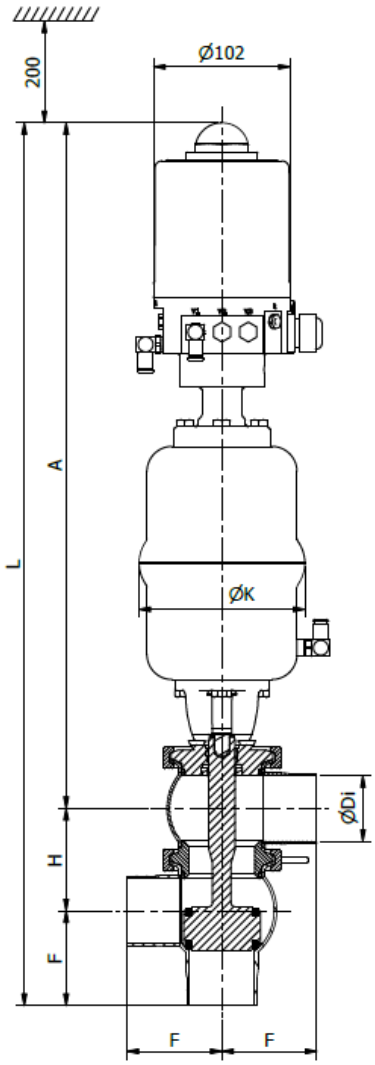

SWE 45/46

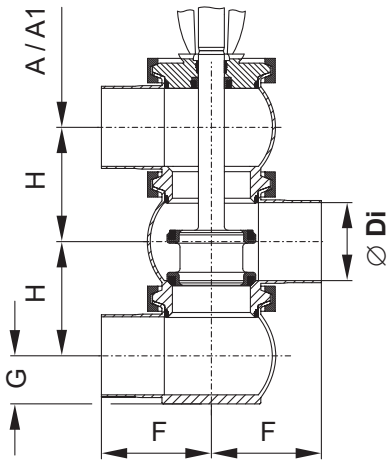

Dimensions in mm										Weight in kg
DN	**A**	**L**	**∅ Di**	**F**	**G**	**H**	**∅ K**	**A1**	**L1**	
25	475	579	26	50	18	54	86	338	442	10
40	479	612	38	67	24	66	86	342	475	10
50	516	666	50	72	32	78	126	379	529	12
65	524	703	66	85	40	94	126	387	566	12
80	577	784	81	98	47,5	109	189	440	647	19
100	587	826	100	111	57	128	189	450	689	21
Inch										
1"	473	574	22,6	50	16,3	50,6	86	336	437	10
1,5"	477	607	34,9	67	22,4	62,9	86	340	470	10
2"	515	663	47,6	72	30,8	75,6	126	378	526	12
2,5"	521	694	60,3	85	37,2	88,3	126	384	557	12
3"	572	763	72,9	90	43,5	100,9	189	435	626	19
4"	585	822	97,6	111	55,8	125,6	189	448	685	21

10. Dimenions/Weights

10.5. SW4 Single seat valve with CU4/CU4plus ATEX Control Unit (Zone 2)

housing variants

SW 41

SW 42

SWE 43

SWE 44

SWE 41

SWE 42

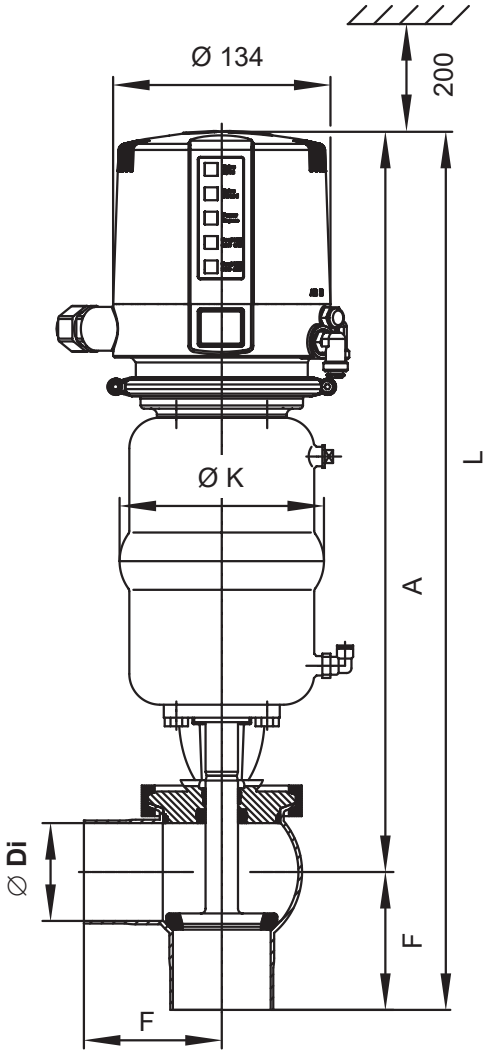

SWE 41/42

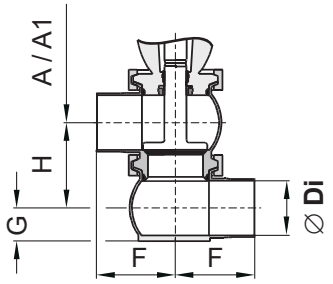

SWE 43/44

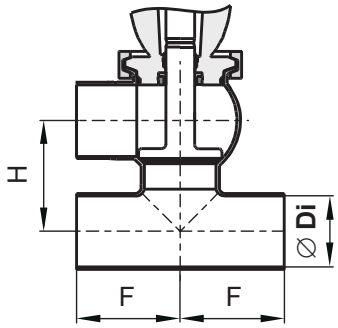

Dimensions in mm										Weight in kg
DN	**A**	**L**	**∅ Di**	**F**	**G**	**H**	**∅ K**	**A1**	**L1**	
25	410	460	26	50	18	54	86	338	388	5
40	414	481	38	67	24	66	86	342	409	5
50	451	523	50	72	32	78	126	379	451	7
65	459	544	66	85	40	94	126	387	472	7
80	512	610	81	98	47,5	109	189	440	438	13
100	522	633	100	111	57	128	189	450	561	15
Inch										
1"	408	458	22,6	50	16,3	50,6	86	336	386	5
1,5"	412	479	34,9	67	22,4	62,9	86	340	407	5
2"	450	522	47,6	72	30,8	75,6	126	378	450	7
2,5"	456	541	60,3	85	37,2	88,3	126	384	469	7
3"	507	597	72,9	90	43,5	100,9	189	435	525	13
4"	520	631	97,6	111	55,8	125,6	189	448	559	15

10. Dimensions/Weights

10.6. SW4 Change-over valve with CU4/CU4plus ATEX Control Unit (Zone 2)

housing variants

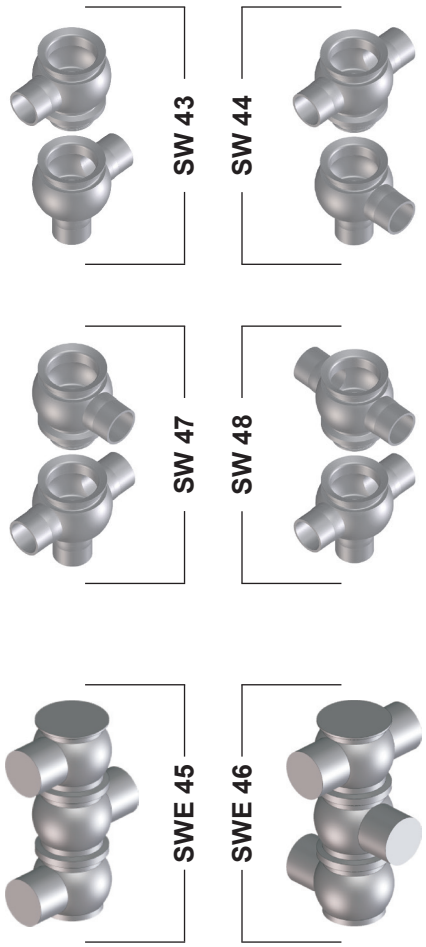

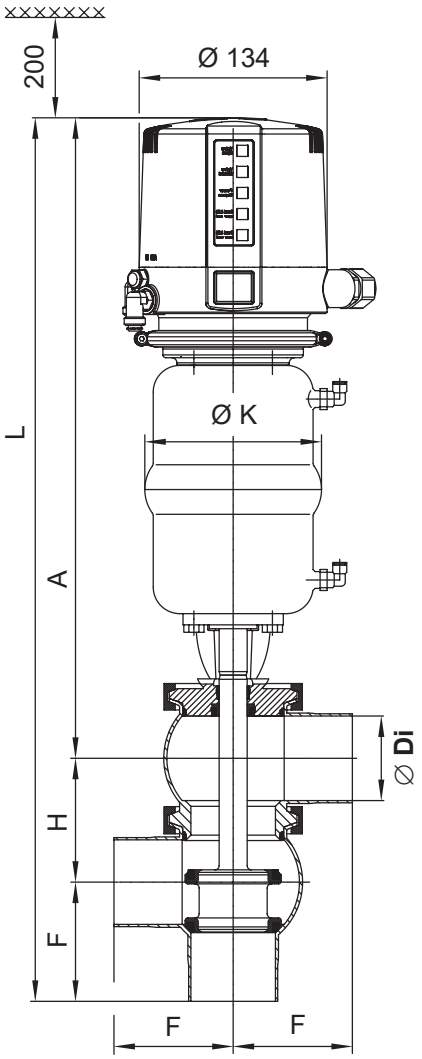

SWE 45/46

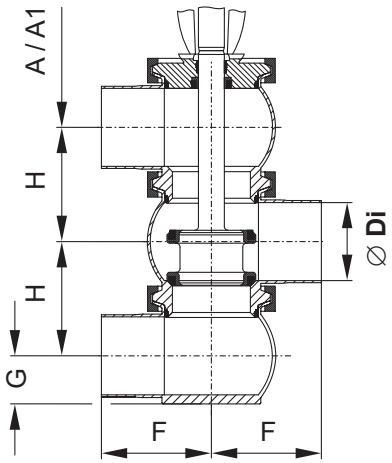

Dimensions in mm										Weight in kg
DN	**A**	**L**	**∅ Di**	**F**	**G**	**H**	**∅ K**	**A1**	**L1**	
25	410	514	26	50	18	54	86	338	442	7
40	414	547	38	67	24	66	86	342	475	7
50	451	601	50	72	32	78	126	379	529	9
65	459	638	66	85	40	94	126	387	566	9
80	512	719	81	98	47,5	109	189	440	647	16
100	522	761	100	111	57	128	189	450	689	18
Inch										
1"	408	509	22,6	50	16,3	50,6	86	336	437	7
1,5"	412	542	34,9	67	22,4	62,9	86	340	470	7
2"	450	598	47,6	72	30,8	75,6	126	378	526	9
2,5"	456	629	60,3	85	37,2	88,3	126	384	557	9
3"	507	698	72,9	90	43,5	100,9	189	435	626	16
4"	520	757	97,6	111	55,8	125,6	189	448	685	18

11. Technical Data

11.1. General data

Product-wetted parts	316L, 1.4404 (DIN EN 10088)
Other parts	304, 1.4301 (DIN EN 10088)
Seals	
standard design	EPDM
options	HNBR, FPM, VMQ
Max. line pressure	10 bar
Operating pressure	depending on the actuator - see chapter Actutaor
Ambient temperature	0 °C - 55 °C**
Max. operating temperature	135 °C** EPDM, HNBR FPM*, VMQ*
Short-term load	140 °C** EPDM, HNBR FPM*, VMQ* *no steam **see table 4.2.

Caution!

Valves > DN100/4"	CIP cleaning liquids up to 100 °C
Ø Air connection	6 x 1 mm
Max. pneumatic air pressure	8 bar
Min. pneumatic air pressure	6 bar

Use dry and clean air, only!

11.2. Compressed air quality

Quality class	acc. to DIN ISO 8573-1
Content of solid particles	quality class 3, max. size of solid particles per m³ 10000 of 0,5 µm < d < 1,0 µm 500 of 1,0 µm < d < 5,0 µm
Content of water	quality class 3, max. dew point temperature -20°C For installations at lower temperatures or at higher altitudes, consider additional measures to reduce the pressure dew point accordingly.
Content of oil	quality class 1, max. 0,01 mg/m³

The oil applied must be compatible with Polyurethane elastomer materials.

11. Technical Data

11.3. Closing times for single seat and change-over valves

The opening and closing times of the valves which are equipped with a control unit, can be fixed through adjustment of the throttling screws at the solenoid valve.

		closing times in sec pneumatic air pressure 6bar	
		hose length 1 m	
DN	**Inch**	**1m**	**10m**
25	1"	1 sec.	1,5 sec.
40	1,5"	1 sec.	1,5 sec.
50	2"	1 sec.	1,5 sec.
65	2,5"	1 sec.	2,5 sec.
80	3"	1 sec.	3,0 sec.
100	4"	1,2 sec.	3,5 sec.

Times mentioned are only approximate values from sample measurements.

11.4. Valve stroke

DN	**Inch**	**Single seat valve SW 41, SW 42 SWE41, 42, 43, 44**	**Change-over valve SW43, SW44 SWE45, 46**
25	1"	**12**	**9**
40	1,5"	**25**	**22**
50	2"	**28**	**25**
65	2,5"	**28**	**25**
80	3"	**28**	**25**
100	4"	**28**	**25**

11.5. Pneumatic air consumption at 6 bar control pressure

Actuator	**per stroke NL**
Ø 74mm	**1,0**
Ø 110mm	**2,1**
Ø 165mm	**4,5**

11. Technical Data

11.6. Calculatory product pressures in (bar) at 6 bar pneumatic air pressure

		Single seat valve SW41 NC			Single seat valve SW41 NO with 6 bar air pressure								
		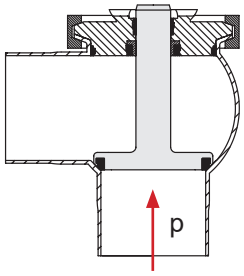			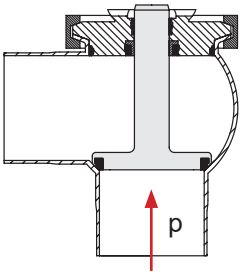								
		Change-over valve SW43 NC lower seat			Change-over valve SW43 NO with 6 bar air pressure			Change-over valve SW43 NC upper seat with 6 bar air pressure			Change-over valve SW43 NO upper seat		
		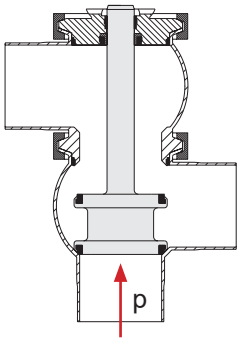			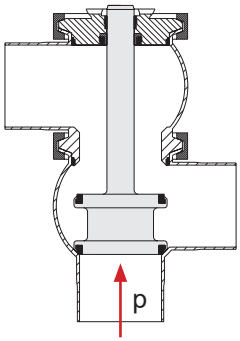			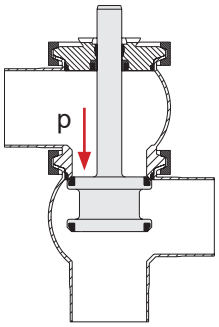			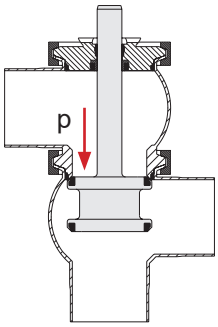		
		Ø Actuator in mm			Ø Actuator in mm			Ø Actuator in mm			Ø Actuator in mm		
DN	Inch	Ø 74	Ø 110	Ø 165	Ø 74	Ø 110	Ø 165	Ø 74	Ø 110	Ø 165	Ø 74	Ø 110	Ø 165
25	1"	11,7			11,2			20,3			21,2		
40	1,5"	5,0	12,5		5,4	11,2		6,9	14,4		6,0	16,0	
50	2"	2,8	7,6	19,6	3,4	7,1	16,8	4,0	8,3	19,5	3,3	8,8	22,8
	2,5"	2,0	5,4	13,8	2,4	5,0	11,9	2,7	5,5	13,1	2,2	6,0	15,3
65		1,7	5,0	11,7	2,0	5,0	10,0	2,2	5,0	10,9	1,8	5,0	12,7
	3"		3,8	9,9		3,6	8,5		3,8	9,1		4,1	10,6
80			3,1	7,9		2,9	6,8		3,0	7,2		3,3	8,4
100	4"		2,1	5,3		1,9	5,0		2,0	5,0		2,1	5,5

standard actuator

11. Technical Data

11.7. Kvs values in m³/h

	SW41, 42 SWE41, 42 SWE43, 44	SW41, 42 SWE41, 42 SWE43, 44	SW42 SWE42 SW44	SW43, 44 SW47, 48	SW43, 44 SW47, 48
	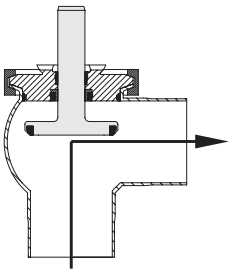	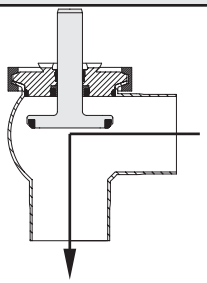	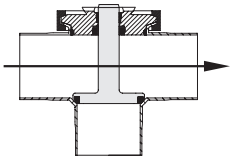	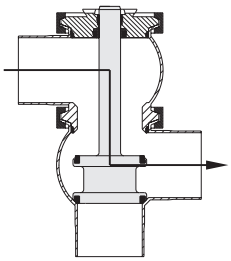	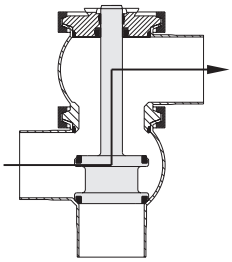
DN					
25	20	21	28	14	13
40	45	53	60	33	31
50	92	85	120	58	51
65	159	159	215	100	89
80	201	209	650	160	137
100	302	325	540	245	212
Inch					
1"	16	18	26	10	10
1,5"	38	45	57	30	28
2"	83	77	118	54	49
2,5"	133	133	185	87	76
3"	176	176	300	137	114
4"	292	310	530	225	210

12. Maintenance

Scan for SW4 Valve Maintenance Video

Note!
The maintenance intervals are different depending on the application and must be determined by the operator performing regular checks.

Inspection of the seals shall be done at regular intervals based on the application of the valve.

Caution!
Do not clean the valve with products containing abrasive or polishing substances.

Required tools:

- 1x wrench SW13
- 1x wrench SW17
- 1x wrench SW19
- 1x wrench SW30
- assembly tool for seat seal (see section 17.)

It is recommended to perform installation, service and maintenance work in the absence of potentially explosive atmosphere in order to safeguard against unforeseen hazards. In accordance with Annex A of EN 1127-1:2019, it is allowed to use steel tools which can only cause single sparks in ATEX Zones 1 and 2 environment for such activities. In case of doubt, spark-resistant tools must be used!

Welding when necessary, shall always be carried out in the absence of explosive atmosphere. In all cases of installation, service or maintenance activity, all the energy sources of the SW4 valve shall be isolated.

- For valve maintenance SPX FLOW offers complete seal kits (see spare parts lists).

Caution!
The use of seal materials being compatible with the product, application and CIP liquids must be ensured. In case of doubt, contact your local SPX FLOW representative.

- For seal replacement instructions, see section 13.2 to 13.3.

Recommendation:
APV assembly grease for EPDM, FPM, HNBR and NBR
(0,75 kg/tin - ref.-No. 000 70-01-019/93; H147382)
(60 g/tube - ref.-No. 000 70-01-018/93; H147381)
or
APV assembly grease for VMQ (Silicone)
(0,6 kg/tin - ref.-No. 000 70-01-017/93; H147380)
(60 g/tube - ref.-No. 000 70-01-016/93; H147379)

! Do not use grease containing mineral oil for EPDM seals.
! Do not use Silicone-based grease for VMQ seals.

Less suited grease types can influence function and service life.

- For valve assembly instructions, see section 13.3.

12. Maintenance

Caution!
Special instructions for seals and cylinder

Valve maintenance for seals	Note
standard load 1-shift-operation	**1 x annually up to 10.000 cycles p.a. 1 x semi-annually above 10.000 cycles p.a.**
hot operation temperature above 80°C	**minimum 1 x semi-annually**

Valve maintenance for actuator with spring	Note
Functional test, visual inspection of valve stroke and control of abnormal running noise of spring	**1 x per year**
Change interval of actuator	**In case of damage, incomplete actuator movement, considerable running noise of spring as well as after 250,000 cycles* as preventive measure, however, after 10 years at the latest.**
***complies with about 8 years in 1-shift-operation and 10-15 cycles per hour.**	

13. Service Instructions for Single Seat Valve

Single seat valve

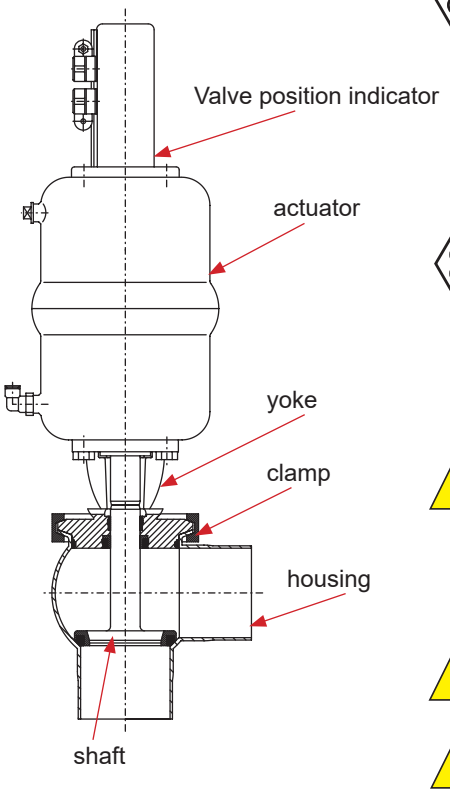

Single seat valves
APV SW41, SW42, SWE41, SWE42, SWE43, SWE44

Caution!
It is recommended to perform installation, service and maintenance work in the absence of potentially explosive atmosphere in order to safeguard against unforeseen hazards. In accordance with Annex A of EN 1127-1:2019, it is allowed to use steel tools which can only cause single sparks in ATEX Zones 1 and 2 environment for such activities. In case of doubt, spark-resistant tools must be used!

Welding when necessary, shall always be carried out in the absence of explosive atmosphere. In all cases of installation, service or maintenance activity, all the energy sources of D4 / D4 SL valve shall be isolated.

13.1. Dismantling from line system

Caution!

1. Shut off the line pressure in the product and cleaning lines, and discharge the pipes if possible.
2. Release connection between the upper housing globe and the connected line.

Note! **Valve design NC:**
Control actuator with air.

Caution! **Do not touch movable parts!**
Risk of injury.

3. Detach clamp and lift valve insert off the housing.
4. Shut off compressed air and remove compressed air supply.
5. Remove control unit from actuator.

13. Service Instructions - Single Seat Valve

Valve with proximity switch holder (PSH)

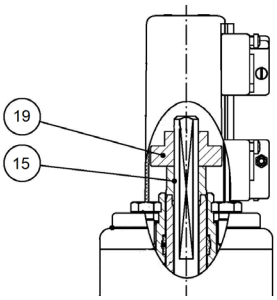

IECEx CU ex ia Control Unit

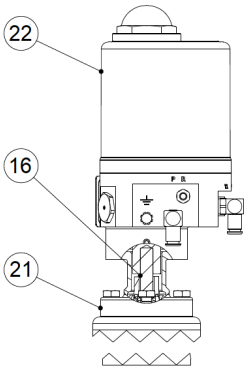

CU4/CU4plus Control Unit

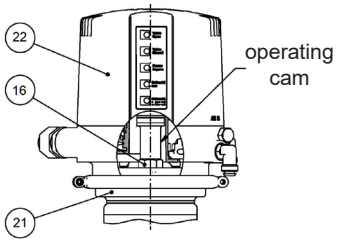

SWE41/42 housing variants

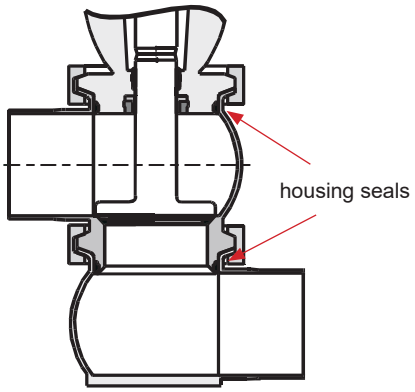

13.2. Dismantling of wear parts (product-wetted parts)

Design with Proximity Switch Holder:

1. Release PSH operating cam (19) from the guide rod while holding up the centering nut (15). Remove the centering nut.

Design with IECEx CU ex ia Control Unit (Zone 1):

1. Unscrew the adapter (21).

Note! Observe position of the adapter.

2. Release hex. nut (16) on Control Unit from the guide rod while holding up the centering nut (15). Remove the centering nut.

Design with ATEX CU4/CU4plus Control Unit (Zone 2):

1. Unscrew the adapter (21).

Note! Observe position of the adapter.

2. Unscrew Control Unit operating cam from guide rod (14).
3. Release hex. nut (16) on Control Unit from the guide rod while holding up the centering nut (15). Remove the centering washer.

ALL designs:

1. Remove housing seal.
2. Unscrew actuator screw from guide rod.
3. Release safety nut while holding up the centering washer. Remove the centering washer.
4. Pull the valve shaft out of the actuator.
   Remove the seat seal.
5. Unscrew the yoke from the actuator.
6. Detach the seat seal, shaft seal and guide bushing.

Note!
To dismantle the lower housing seal of the SWE41/42 valve variants, detach clamp, separate housing and remove the housing seal.

13. Service Instructions - Single Seat Valve

13.3. Installation of seals and Assembly of valve

fig. 13.3.1.

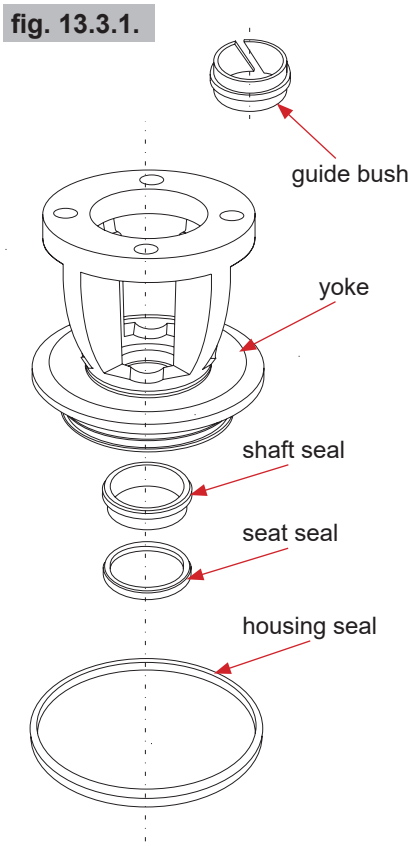

1. Insert the guide bush into the yoke.
   Afterwards, insert the shaft seal and press in the slightly greased seat seal (see fig. 13.3.1.).
   See to the correct installing position.

2. Install the yoke at the actuator.

3. Insert the seat seal into the shaft. Use the assembly tool to install the seat seal (see section 17). Grease the seat seal only slightly before its installation.
   In case of manual installation, vent the seal groove with a thin object between the seal and groove wall.

4. Install the protective tube via the thread of the guide rod. Slide the shaft through the yoke and actuator. Remove the protective tube. Place centering washer and tighten the actuator screw on the guide rod.
   Hold up the centering washer during this process.
   Note! Tightening torque 40 Nm.

5. Slightly grease the housing seal and install it in the groove of the yoke, respectively for SWE41/42 in the groove of the upper housing.

6. Fasten the valve position indicator.

13.4. Installation of valve

1. Connect compressed air supply.

Note! **Valve design NC: Control actuator with air.**

Caution! **Do not touch movable valve parts!**
Risk of injury by sudden valve operation.

2. Place the valve insert carefully into the housing and fasten the clamp.

Note! **The housing seal must not be damaged during the installation.**

Note! **Valve design NC: Shut off compressed air.**

3. Check the basic adjustment of the valve position indication if necessary. The shift points can be adjusted by turning the positioning screw in the control unit.

4. **Design with IECEx CU ex ia Control Unit (Zone 1):**
   Install the adapter (21) for the control unit on the actuator (13). Apply a drop of a screw locker (e.g. type: Loctite semi-solid) in the area of the threaded bore of the operating cam. Fasten the operating cam on the guide rod. Place the control unit (22) on the adapter.

5. **Design with CU4/CU4plus Control Unit (Zone 2):**
   Install the adapter (21) for the control unit on the actuator (13). Apply a drop of a screw locker (e.g. type: Loctite semi-solid) in the area of the threaded bore of the operating cam. Fasten the operating cam on the guide rod. Place the control unit (22) on the adapter.

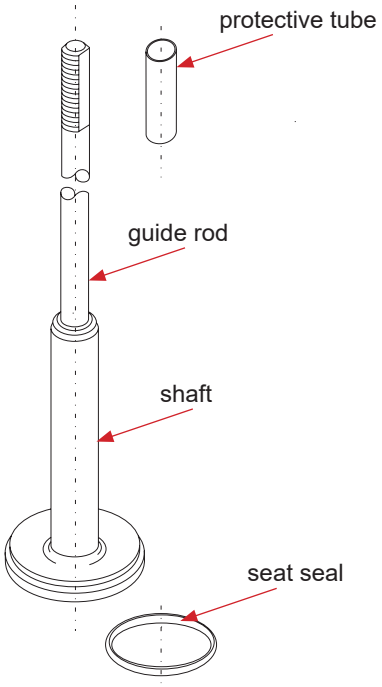

14. Service Instructions for Change-Over Valve

Change-over valve

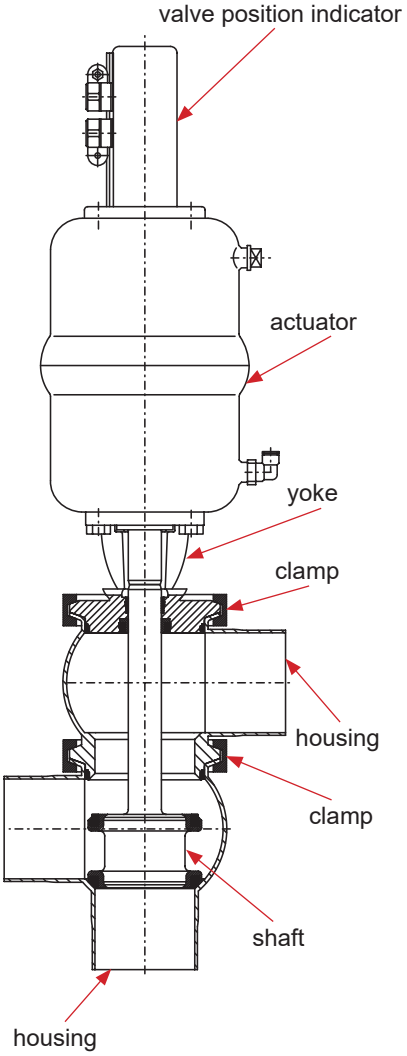

Caution!
It is recommended to perform installation, service and maintenance work in the absence of potentially explosive atmosphere in order to safeguard against unforeseen hazards. In accordance with Annex A of EN 1127-1:2019, it is allowed to use steel tools which can only cause single sparks in ATEX Zones 1 and 2 environment for such activities. In case of doubt, spark-resistant tools must be used!

Welding when necessary, shall always be carried out in the absence of explosive atmosphere. In all cases of installation, service or maintenance activity, all the energy sources of D4 / D4 SL valve shall be isolated.

14.1. Dismantling from the line system

Caution!

1. Shut off the line pressure in the product and cleaning lines, and discharge the pipes if possible.
2. Release connection between the upper housing globe and the connected line.

Note! — **Valve design NC: Control actuator with air.**

Caution! — **Do not touch movable valve parts! Risk of injury.**

3. Remove the lower clamp.
4. Lift the valve insert together with the upper housing off the lower housing.

Note! — **Valve design NC: Shut off compressed air and remove compressed air supply.**

14. Service Instructions - Change-Over Valve

14.2. Dismantling of wear parts (product-wetted parts)

Valve with proximity switch holder (PSH)

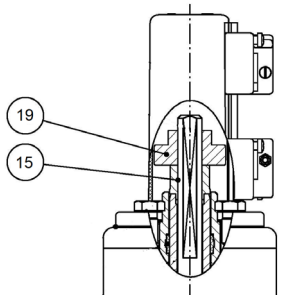

Design with Proximity Switch Holder:

1. Release PSH operating cam (19) from the guide rod while holding up the centering nut (15). Remove the centering nut.

IECEx CU ex ia Control Unit

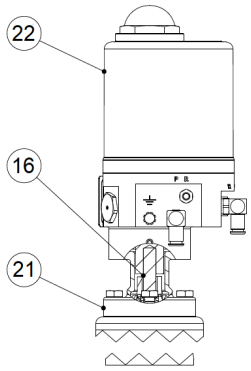

Design with IECEx CU ex ia Control Unit (Zone 1):

1. Unscrew the adapter (21).

Note! Observe position of the adapter.

2. Release hex. nut (16) on Control Unit from the guide rod while holding up the centering nut (15). Remove the centering nut.

CU4/CU4plus Control Unit

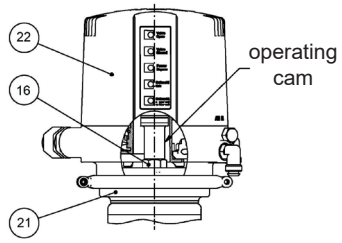

Design with ATEX CU4/CU4plus Control Unit (Zone 2):

1. Unscrew the adapter (21).

Note! Observe position of the adapter.

2. Unscrew Control Unit operating cam from guide rod (14).
3. Release hex. nut (16) on Control Unit from the guide rod while holding up the centering nut (15). Remove the centering washer.

ALL designs:

1. Unscrew the actuator screw from the guide rod.
   Dismantle adapter for control unit.

Note! **Valve design NO:**
Control valve with compressed air.

2. Unscrew the safety nut while holding up the centering washer.
   Remove the centering washer.

Note! **Valve design NO:**
Shut off valve with compressed air.

3. Take the shaft out of the actuator and remove the seat seals.
4. Detach the upper clamp and upper housing.
   Remove the two housing seals.
5. Unscrew the yoke from the actuator.
6. Take off seat seals, shaft seal and guide bushing.

14. Service Instructions for Change-Over Valve

14.3. Installation of seals and assembly of valve

fig. 14.3.

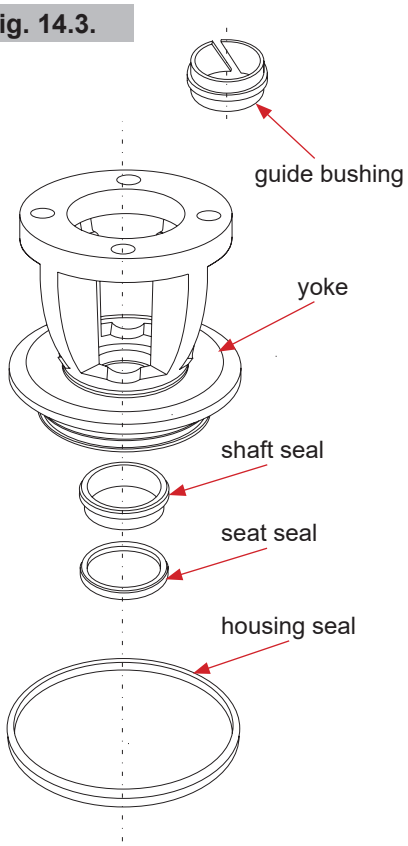

1. Insert the guide bushing into the yoke. Then place the shaft seal and press in the slightly greased seat seal.
   Note! Observe the correct installing position.
2. Install the yoke at the actuator.
3. Insert the seat seal in the shaft. Use the APV assembly tool to install the seat seal, see chapter 17. Grease the seat seal only slightly before its installation. In case of manual installation, vent the seal groove with a thin object between seal and groove wall.
4. Slightly grease the housing seals and install them in the grooves of the yoke and of the upper housing.
   Fasten the upper housing at the yoke by means of the clamp.

   Note! Valve design NO: Control the valve with air.
5. Slide the protective tube over the thread of the guide rod.
   Slide the shaft through the upper housing, yoke and actuator.
   Place the centering washer and tighten the safety nut.
   Hold up the safety nut during this process.
   Tightening torque 40 Nm.

   Note! Valve design NO: Shut off compressed air.
6. Install the adapter for the control unit on the actuator.
   Apply a drop of a screw locker (e.g. type: Loctite semi-solid) in the area of the threaded bore of the actuator screw.
   Fasten actuator screw on the guide rod.

14.4. Installation of valve

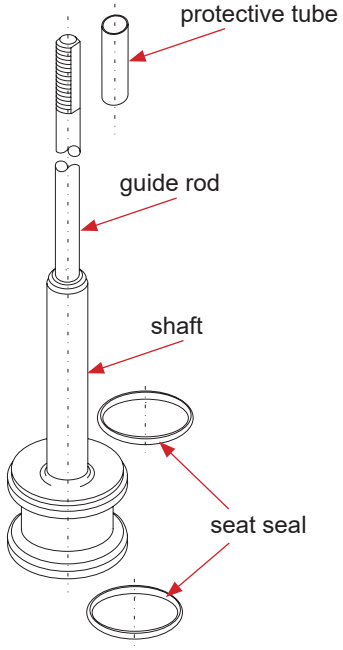

1. Connect compressed air supply.

   Note! Valve design NC: Control actuator with air.

   Caution! Do not touch movable valve parts!
   Risk of injury by sudden valve operation!
2. Place the valve insert carefully into the lower housing and fasten the lower clamp.
   The housing seals must not be damaged during the installation.

   Note! Valve design NC: Shut off compressed air.
3. Check the basic adjustment of the valve position indicator if necessary. The shift points can be adjusted by turning the positioning screw in the control unit.
4. **Design with IECEx CU ex ia Control Unit (Zone 1):**
   Install the adapter (21) for the control unit on the actuator (13). Apply a drop of a screw locker (e.g. type: Loctite semi-solid) in the area of the threaded bore of the operating cam. Fasten the operating cam on the guide rod. Place the control unit (22) on the adapter.
5. **Design with CU4/CU4plus Control Unit (Zone 2):**
   Install the adapter (21) for the control unit on the actuator (13). Apply a drop of a screw locker (e.g. type: Loctite semi-solid) in the area of the threaded bore of the operating cam. Fasten the operating cam on the guide rod. Place the control unit (22) on the adapter.

15. Service Instructions for Actuator

Caution! Actuators must be replaced after 250,000 operating cycles or after 10 years at the latest. Contact SPX FLOW or your distributor for replacement.

Caution!
It is recommended to perform installation, service and maintenance work in the absence of potentially explosive atmosphere in order to safeguard against unforeseen hazards. In accordance with Annex A of EN 1127-1:2019, it is allowed to use steel tools which can only cause single sparks in ATEX Zones 1 and 2 environment for such activities. In case of doubt, spark-resistant tools must be used!

fig. 15.1.

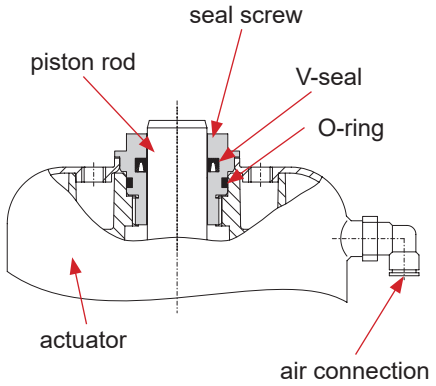

15.1. Maintenance of actuator

1. Remove the air hoses from the actuator.
2. Remove the inner hexagon screws from the adapter of the control unit.
3. Unscrew the two seal screws with a spanner SW30 while holding up the actuator with a strap wrench.

fig. 15.2.

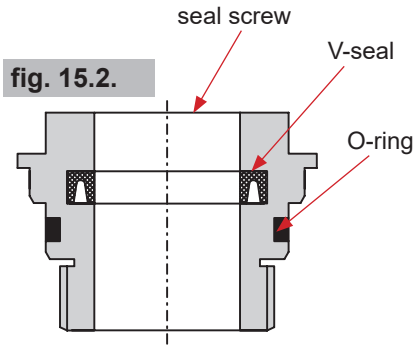

15.2. Installation of seals and Assembly of actuator

1. Install the greased O-rings and V-seals in the seal screws (fig.15.2). See to the correct installing direction of the V-seal.
2. Slide the seal screws over the piston rod at both sides of the actuator and tighten them.
3. Fasten the adapter for the control unit and the yoke on the actuator.

Note! **Observe position of the adapter.**

Note! **Consider the required valve design NC or NO during the installation of the yoke.**

NC = normally closed / air-to-raise, spring-to-lower
NO = normally open / air-to-lower, spring-to-raise

4. Fasten the air hoses.

fig. 15.3.

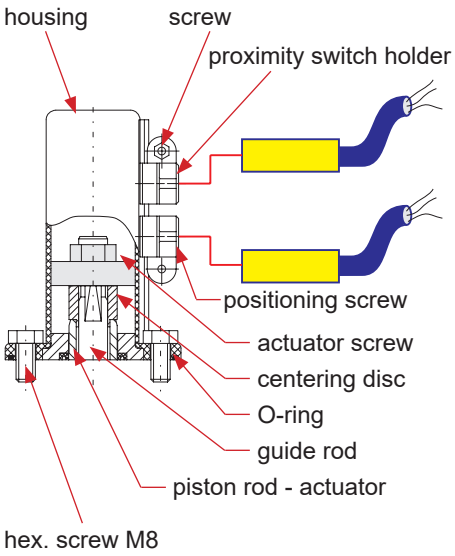

15.3. Actuator with valve position indicator Assembly of holders (fig. 15.3.)

1. Install the actuator screw on the actuator.
2. Provide the housing with the O-ring.
3. Fasten the housing by means of the
3. Fasten the housing by means of the 4 hex. screws M8 on the actuator.
4. Release the screws at the proximity switch holder and insert the corresponding proximity switches. Then fasten the screws.
5. Place the actuator in one limit position.
6. Place the corresponding proximity switch in the corresponding position. Release the positioning screw and move the holder until the corresponding signal is indicated. Then continue the movement by 2 to 3 mm to secure indication. Fasten the positioning screw.
7. Place the actuator in the other limit position and carry out positioning of the second proximity switch.

16. Reconstruction of Actuator

Caution! Actuators must be replaced after 250,000 operating cycles or after 10 years at the latest. Contact SPX FLOW or your distributor for replacement.

Caution!
It is recommended to perform installation, service and maintenance work in the absence of potentially explosive atmosphere in order to safeguard against unforeseen hazards. In accordance with Annex A of EN 1127-1:2019, it is allowed to use steel tools which can only cause single sparks in ATEX Zones 1 and 2 environment for such activities. In case of doubt, spark-resistant tools must be used!

With SW4 valves, the size of the actuator can be changed.

Observe the respective line pressure, see table 11.6, to increase or decrease the actuator sizes (Ø 74 mm, Ø 110 mm, Ø 165 mm).

16.1. Reconstruction of actuator

Disassembly
Disassembly is carried out as described in section 13. for single seat valves and in section 14. for change-over valves.

To change the actuator size, the respective guide rod (4) must be replaced.

Note! Clamp the valve disc in a vice.
The valve disc must not be damaged (use protective cheeks or cleaning rags). Even inferior damage at the shaft rod can lead to leakages.

Turn the guide rod out of the shaft by means of the centering washer and a wrench SW17.

16.2. Assembly of actuator

1. Turn the respective guide rod into the shaft to the actuator.

   Note! Tightening torque 40 Nm

2. Further assembly is undertaken in reverse order.

17. Assembly Tool

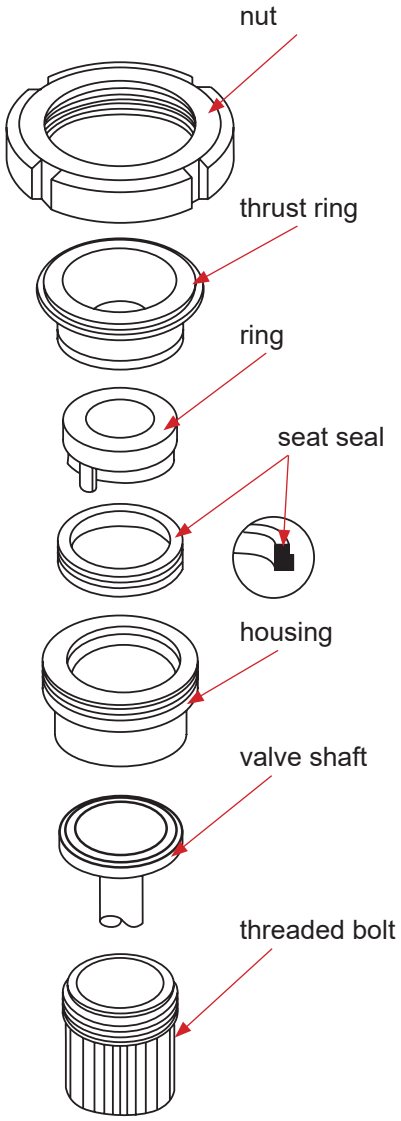

The assembly tool consists of:

- nut
- thrust ring
- ring with venting nose
- housing
- threaded bolt

Installation of seat seal in the valve shaft

1. Insert the valve shaft into the housing in such a way that the seal groove is in the housing.
2. Clamp the shaft into the housing by means of the threaded bolt.
3. Slightly grease the seat seal with APV assembly grease. Then install the seal on the ring with the venting nose until it stops.
4. Introduce the ring with the installed seat seal into the housing and press it down until it stops sensibly.
5. Insert the thrust ring into the housing. Screw on the nut and tighten it with a hook spanner until it stops.
6. Release the nut. Take ring and thrust ring off the housing.
7. Take housing out of the vice, take off the threaded bolt. Detach the valve shaft from the housing.

Check the even fit of the seat seal.

To simplify the installation of the seat seal, the following assembly tools are available:

17.1. Assembly tool for seat seal

DN	Inch	Reference No.	ID No.
25	1"	000 51-13-110/17	H179465
40	1,5"	000 51-13-111/17	H179466
50	2"	000 51-13-112/17	H179467
	2,5"	000 51-13-120/17	H179468
65		000 51-13-113/17	H179469
	3"	000 51-13-121/17	H179470
80		000 51-13-114/17	H179471
100	4"	000 51-13-115/17	H179472

18. Trouble Shooting

Failure	Remedy
Valve closed and pressure in upper housing	
Valve is untight.	Replace seat seals. Check line pressure: Permissible line pressure see chapter 9.
Leakage in the area of the clamp	Replace housing seals.
Leakage at upper shaft in the yoke area	Replace shaft seal, seat seal and guide bush.
Actuator	
Air escapes at the actuator rod.	Replace complete seal screw for actuator.
Actuator does not work (air escapces permanently from the venting plug).	Replace complete actuator.
Valve position indication	
No feedback.	Carry out fine adjustment.

Additional reference is given to the Instruction Manuals of the Control Units:
APV IECEx CU ex ia (ATEX Zone 1 Gas Applications)
and
CU4 for ATEX Zone 2 Gas Applications
CU4plus ATEX Zone 2 Gas Applications
with different inner designs.

19. Spare Parts Lists

The reference numbers of the spare parts for t
The different valve designs and sizes are included in the attached spare parts drawings with corresponding lists.

Please indicate the following data to place an order for spare parts:

- number of required parts
- reference number
- designation

Data are subject to change.

Information contained in this document is subject to change without notice and does not represent a commitment on the part of SPX FLOW, Inc.. No part of this document may be reproduced or transmitted in any form or by any means, electronic or mechanical, including photocopying and recording, for any

Spare parts list:

Single Seat Valve SW41, SW42, SWE43, SWE44, SWE41, SWE42
Device Category 2G for ATEX Zone 1
DN 25 - DN100; 1" - 4"

Date:	24.07.23				**SPX FLOW**
Name:	Shreshth				
Approved by:	Peters				
Date:					Page 1 of 26
Name:					**RN ATEX 054.805-1**
Approved by:					

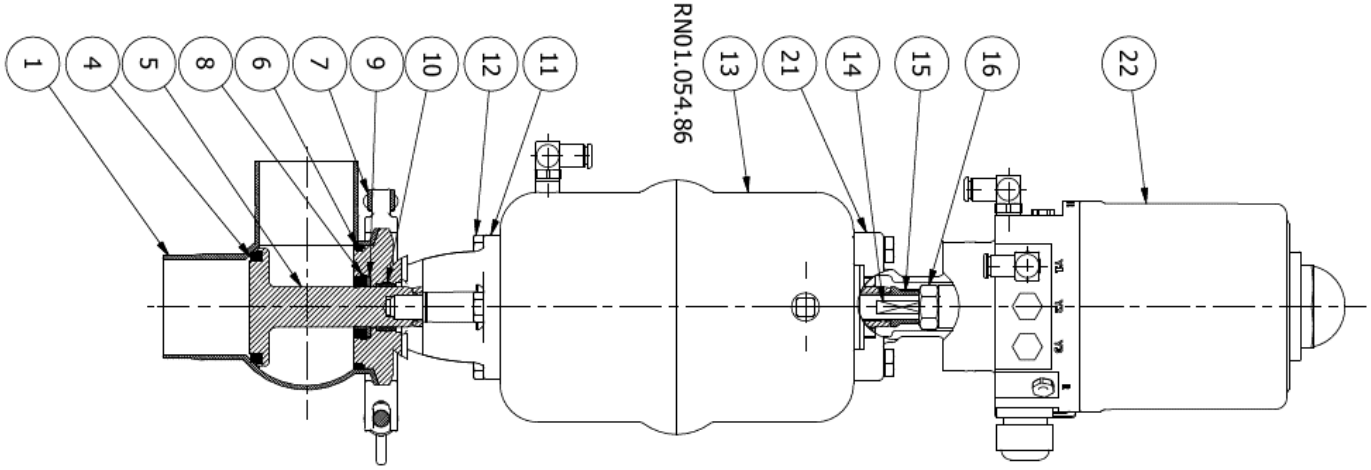

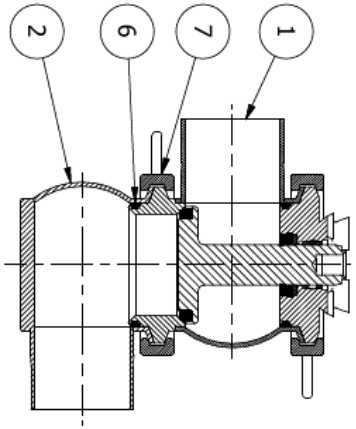

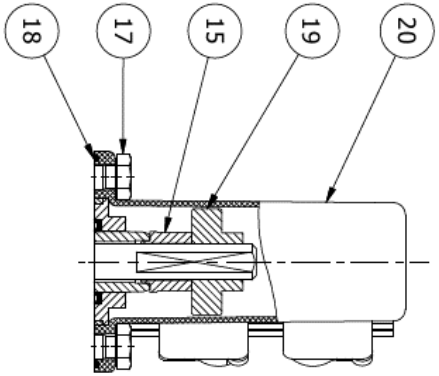

Information contained in this document is subject to change without notice and does not represent a commitment on the part of SPX FLOW, Inc.. No part of this document may be reproduced or transmitted in any form or by any means, electronic or mechanical, including photocopying and recording, for any

Spare parts list:

Change Over Valve SW43, SW44, SW47, SW48, SWE45, SWE46, SWE47, SWE48
Device Category 2G for ATEX Zone 1
DN 25 - DN100; 1" - 4"

Date:	09/12	24.07.23			**SPX FLOW**
Name:	RAP	Shreshth			
Approved by:		Peters			
Date:					Page 2 of 26
Name:					**RN ATEX 054.805-1**
Approved by:					

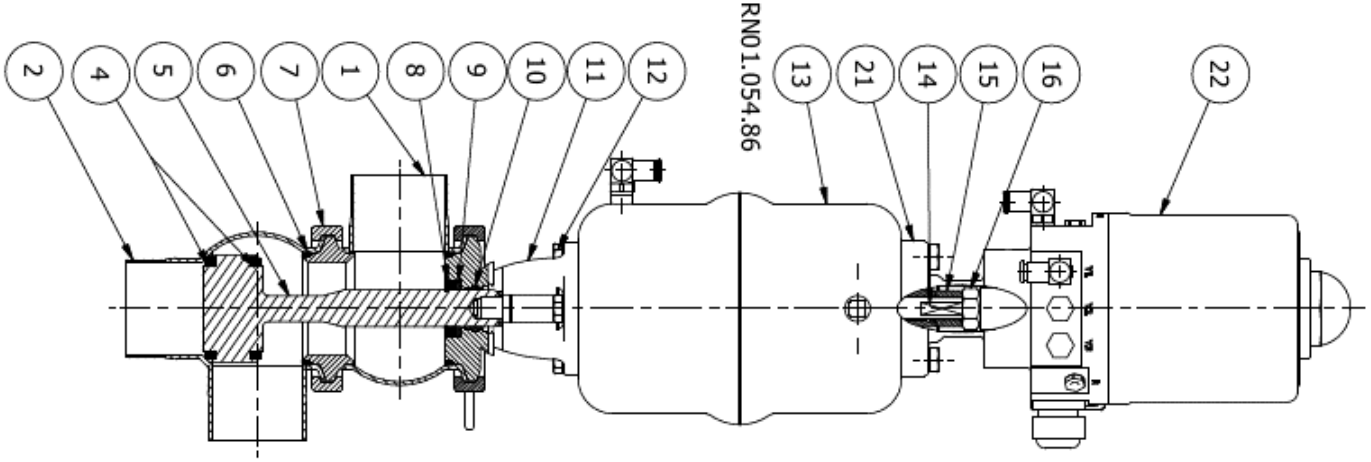

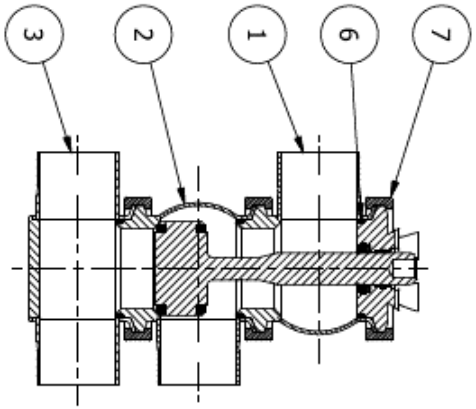

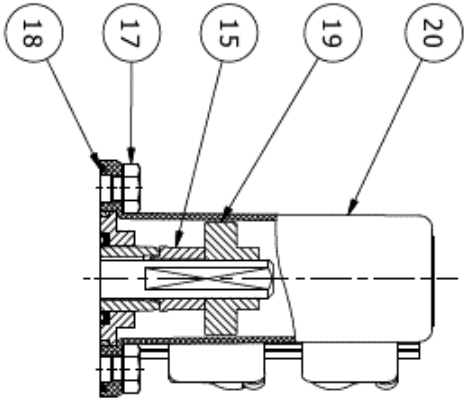

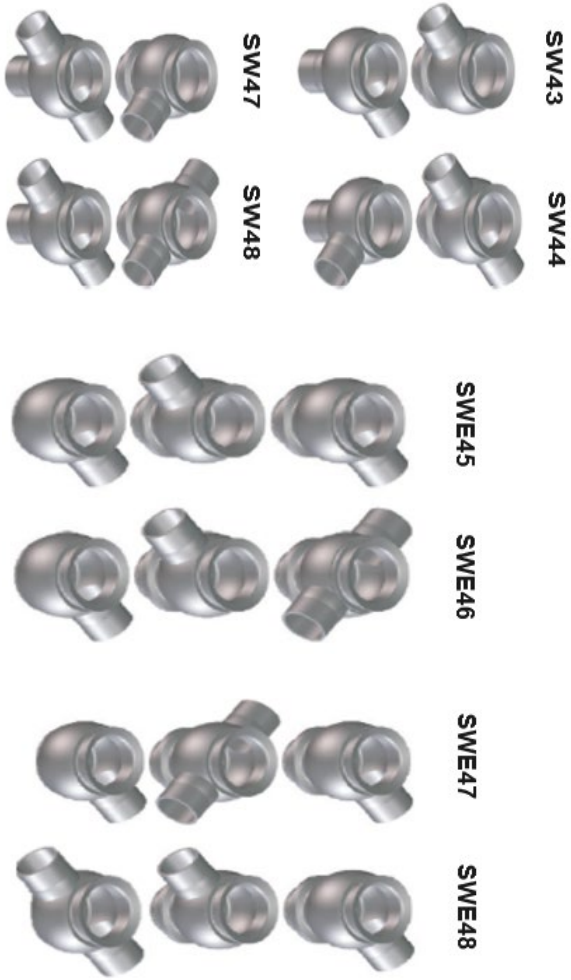

Information contained in this document is subject to change without notice and does not represent a commitment on the part of SPX FLOW, Inc.. No part of this document may be reproduced or transmitted in any form or by any means, electronic or mechanical, including photocopying and recording, for any

Spare parts list:

Single Seat Valve SW41, SW42, SWE43, SWE44, SWE41, SWE42
Change Over Valve SW43, SW44, SW47, SW48, SWE45, SWE46, SWE47, SWE48
Device Category 2G for ATEX Zone 1
DN 25

Date:	24.07.23			
Name:	Shreshth			
Approved by:	Peters			
Date:				
Name:				
Approved by:				

SPX FLOW

RN ATEX 054.805-1

Item	Quantity	Description		Material	Part no.
1	1	Housing	SW41	1.4404	H168561
1	1	Housing	SW42	1.4404	H172428
1	1	Housing	SWE43	1.4404	H169949
1	1	Housing	SWE44	1.4404	H172645
1	1	Housing upper part	SWE41	1.4404	H168564
2	1	Housing lower part		1.4404	H172763
1	1	Housing upper part	SWE42	1.4404	H172466
2	1	Housing lower part		1.4404	H172763
1	1	Housing upper part	SW43	1.4404	H168564
2	1	Housing		1.4404	H168561
1	1	Housing upper part	SW44	1.4404	H172466
2	1	Housing		1.4404	H168561
1	1	Housing upper part	SW47	1.4404	H168564
2	1	Housing		1.4404	H172428
1	1	Housing upper part	SW48	1.4404	H172466
2	1	Housing		1.4404	H172428
1	1	Housing upper part	SWE45	1.4404	H168564
2	1	Housing upper part		1.4404	H168564
3	1	Housing lower part		1.4404	H172763
1	1	Housing upper part	SWE46	1.4404	H172466
2	1	Housing upper part		1.4404	H168564
3	1	Housing lower part		1.4404	H172763
1	1	Housing upper part	SWE47	1.4404	H168564
2	1	Housing upper part		1.4404	H172466
3	1	Housing lower part		1.4404	H172763
1	1	Housing upper part	SWE48	1.4404	H168564
2	1	Housing upper part		1.4404	H168564
3	1	Housing lower part		1.4404	H311363

Item	Quantity	Description		Material	Part no.
4	1	Seat seal	SW41, SW42 SWE41, SWE42, SWE43, SWE44	EPDM	H77442
				HNBR	H170176
				FPM	H77441
				VMQ	H77440
	2	Seat seal	SW43, SW44, SW47, SW48 SWE45, SWE46, SWE47, SWE48	EPDM	H77442
				HNBR	H170176
				FPM	H77441
				VMQ	H77440
5	1	Valve shaft	SW41, SW42 SWE41, SWE42, SWE43, SWE44	1.4404	H170329
	1	Valve shaft	SW43, SW44, SW47, SW48 SWE45, SWE46, SWE47, SWE48	1.4404	H170566
6	1	Housing seal	SW41, SW42 SWE41, SWE42, SWE43, SWE44	EPDM	H136432
				HNBR	H172124
				FPM	H136431
				VMQ	
	2	Housing seal	SW43, SW44, SW47, SW48	EPDM	H136432
				HNBR	H172124
				FPM	H136431
				VMQ	
	3	Housing seal	SWE45, SWE46, SWE47, SWE48	EPDM	H136432
				HNBR	H172124
				FPM	H136431
				VMQ	
7	1	Clamp	SW41, SW42 SWE41, SWE42, SWE43, SWE44	1.4301	H126263
	2	Clamp	SW43, SW44, SW47, SW48	1.4301	H126263
	3	Clamp	SWE45, SWE46, SWE47, SWE48	1.4301	H126263
8	1	Shaft seal		Turcon MF6	H323082

Information contained in this document is subject to change without notice and does not represent a commitment on the part of SPX FLOW, Inc.. No part of this document may be reproduced or transmitted in any form or by any means, electronic or mechanical, including photocopying and recording, for any

Spare parts list:

Single Seat Valve SW41, SW42, SWE43, SWE44, SWE41, SWE42
Change Over Valve SW43, SW44, SW47, SW48, SWE45, SWE46, SWE47, SWE48
Device Category 2G for ATEX Zone 1
DN 25

Date:	24.07.23			
Name:	Shreshth			
Approved by:	Peters			
Date:				
Name:				
Approved by:				

SPX FLOW

RN ATEX 054.805-1

Item	Quantity	Description		Material	Part no.
9	1	Seat seal		EPDM	H77442
				HNBR	H170176
				FPM	H77441
				VMQ	H77440
10	1	Bushing		PTFE + 25% carbon	H207154
11	1	Yoke		1.4404	H171382
12	4	Hex. screw M8x16	DIN EN 24017-A2-70	A2-70	H78772
13	1	Actuator	Ø74		H171378
14	1	Guide rod		1.4305	H171061
15	1	Centering nut		1.4301	H170196
16	1	Hex. Nut	DIN EN ISO 10511-M12-A2	A2-70	H79298
17	4	Hex. screw M8x16	DIN EN 24017-A2-70	A2-70	H78772
18	1	O-ring		NBR	H173930
19	1	Opereating cam		1.4523	H173086
20	1	Proximity switch holder housing SW4		VESTAMID	H173931
21	1	ATEX CU-S adapter complete		1.4301	H332570
22	1	IECEX CU ex ia 1 S&T 24V		1.4301	H337798

Item	Quantity	Description		Material	Part no.
		Pos. 4, 6, 8, 9 and 10 available as complete seal kit only			
		If seat seal (pos.4) in VMQ - than housing seal (pos. 6) in HNBR			
	1	Seal kit	SW41, SW42 - SWE 43, SWE44	EPDM	H175805
	1	Seal kit	SW41, SW42 - SWE 43, SWE44	HNBR	H175811
	1	Seal kit	SW41, SW42 - SWE 43, SWE44	FPM	H310446
	1	Seal kit	SW41, SW42 - SWE 43, SWE44	VMQ	H310447
		Pos. 4, 6, 8, 9 and 10 available as complete seal kit only			
		If seat seal (pos.4) in VMQ - than housing seal (pos. 6) in HNBR			
	1	Seal kit	SWE 41, SWE42	EPDM	H175821
	1	Seal kit	SWE 41, SWE42	HNBR	H175828
	1	Seal kit	SWE 41, SWE42	FPM	H310455
	1	Seal kit	SWE 41, SWE42	VMQ	H310456
		Pos. 4, 6, 8, 9 and 10 available as complete seal kit only			
		If seat seal (pos.4) in VMQ - than housing seal (pos. 6) in HNBR			
	1	Seal kit	SW43, SW44, SW47, SW48	EPDM	H175838
	1	Seal kit	SW43, SW44, SW47, SW48	HNBR	H175844
	1	Seal kit	SW43, SW44, SW47, SW48	FPM	H205969
	1	Seal kit	SW43, SW44, SW47, SW48	VMQ	H201995
		Pos. 4, 6, 8, 9 and 10 available as complete seal kit only			
		If seat seal (pos.4) in VMQ - than housing seal (pos. 6) in HNBR			
	1	Seal kit	SWE45, SWE46, SWE47,SWE48	EPDM	H203753
	1	Seal kit	SWE45, SWE46, SWE47,SWE48	HNBR	H325420
	1	Seal kit	SWE45, SWE46, SWE47,SWE48	FPM	H325421
	1	Seal kit	SWE45, SWE46, SWE47,SWE48	VMQ	

Information contained in this document is subject to change without notice and does not represent a commitment on the part of SPX FLOW, Inc.. No part of this document may be reproduced or transmitted in any form or by any means, electronic or mechanical, including photocopying and recording, for any

Spare parts list:

Single Seat Valve SW41, SW42, SWE43, SWE44, SWE41, SWE42
Change Over Valve SW43, SW44, SW47, SW48, SWE45, SWE46, SWE47, SWE48
Device Category 2G for ATEX Zone 1
1"

Date:	24.07.23				**SPX FLOW**
Name:	Shreshth				
Approved by:	Peters				
Date:					Page 5 of 26
Name:					**RN ATEX 054.805-1**
Approved by:					

Item	Quantity	Description		Material	Part no.
1	1	Housing	SW41	1.4404	H168373
1	1	Housing	SW42	1.4404	H172434
1	1	Housing	SWE43	1.4404	H172804
1	1	Housing	SWE44	1.4404	H172810
1	1	Housing upper part	SWE41	1.4404	H168678
2	1	Housing lower part		1.4404	H172711
1	1	Housing upper part	SWE42	1.4404	H172476
2	1	Housing lower part		1.4404	H172711
1	1	Housing upper part	SW43	1.4404	H168678
2	1	Housing		1.4404	H168673
1	1	Housing upper part	SW44	1.4404	H172476
2	1	Housing		1.4404	H168673
1	1	Housing upper part	SW47	1.4404	H168678
2	1	Housing		1.4404	H172434
1	1	Housing upper part	SW48	1.4404	H172476
2	1	Housing		1.4404	H172434
1	1	Housing upper part	SWE45	1.4404	H168678
2	1	Housing upper part		1.4404	H168678
3	1	Housing lower part		1.4404	H172711
1	1	Housing upper part	SWE46	1.4404	H172476
2	1	Housing upper part		1.4404	H168678
3	1	Housing lower part		1.4404	H172711
1	1	Housing upper part	SWE47	1.4404	H168678
2	1	Housing upper part		1.4404	H172476
3	1	Housing lower part		1.4404	H172711
1	1	Housing upper part	SWE48	1.4404	H168678
2	1	Housing upper part		1.4404	H168678
3	1	Housing lower part		1.4404	H311367

Item	Quantity	Description		Material	Part no.
4	1	Seat seal	SW41, SW42 SWE41, SWE42, SWE43, SWE44	EPDM	H77442
				HNBR	H170176
				FPM	H77441
				VMQ	H77440
	2	Seat seal	SW43, SW44, SW47, SW48 SWE45, SWE46, SWE47, SWE48	EPDM	H77442
				HNBR	H170176
				FPM	H77441
				VMQ	H77440
5	1	Valve shaft	SW41, SW42 SWE41, SWE42, SWE43, SWE44	1.4404	H170335
	1	Valve shaft	SW43, SW44, SW47, SW48 SWE45, SWE46, SWE47, SWE48	1.4404	H170572
6	1	Housing seal	SW41, SW42 SWE41, SWE42, SWE43, SWE44	EPDM	H136432
				HNBR	H172124
				FPM	H136431
				VMQ	
	2	Housing seal	SW43, SW44, SW47, SW48	EPDM	H136432
				HNBR	H172124
				FPM	H136431
				VMQ	
	3	Housing seal	SWE45, SWE46, SWE47, SWE48	EPDM	H136432
				HNBR	H172124
				FPM	H136431
				VMQ	
7	1	Clamp	SW41, SW42 SWE41, SWE42, SWE43, SWE44	1.4301	H126263
	2	Clamp	SW43, SW44, SW47, SW48	1.4301	H126263
	3	Clamp	SWE45, SWE46, SWE47, SWE48	1.4301	H126263
8	1	Shaft seal		Turcon MF6	H323082

Information contained in this document is subject to change without notice and does not represent a commitment on the part of SPX FLOW, Inc.. No part of this document may be reproduced or transmitted in any form or by any means, electronic or mechanical, including photocopying and recording, for any

Spare parts list:

Single Seat Valve SW41, SW42, SWE43, SWE44, SWE41, SWE42
Change Over Valve SW43, SW44, SW47, SW48, SWE45, SWE46, SWE47, SWE48
Device Category 2G for ATEX Zone 1
1"

Date:	24.07.23				**SPX FLOW**
Name:	Shreshth				
Approved by:	Peters				
Date:					Page 6 of 26
Name:					**RN ATEX 054.805-1**
Approved by:					

Item	Quantity	Description		Material	Part no.
9	1	Seat seal		EPDM	H77442
				HNBR	H170176
				FPM	H77441
				VMQ	H77440
10	1	Bushing		PTFE + 25% carbon	H207154
11	1	Yoke		1.4404	H171382
12	4	Hex. screw M8x16	DIN EN 24017-A2-70	1.4301	H78772
13	1	Actuator	Ø74		H171378
14	1	Guide rod		1.4305	H171061
15	1	Centering nut		1.4301	H170196
16	1	Hex. Nut	DIN EN ISO 10511-M12-A2	A2-70	H79298
17	4	Hex. screw M8x16	DIN EN 24017-A2-70	A2-70	H78772
18	1	O-ring		NBR	H173930
19	1	Opereating cam		1.4523	H173086
20	1	Proximity switch holder housing SW4		VESTAMID	H173931
21	1	ATEX CU-S adapter complete		1.4301	H332570
22	1	IECEX CU ex ia 1 S&T 24V		1.4301	H337798

Item	Quantity	Description		Material	Part no.
		Pos. 4, 6, 8, 9 and 10 available as complete seal kit only			
		If seat seal (pos.4) in VMQ - than housing seal (pos. 6) in HNBR			
	1	Seal kit	SW41, SW42 - SWE 43, SWE44	EPDM	H175805
	1	Seal kit	SW41, SW42 - SWE 43, SWE44	HNBR	H175811
	1	Seal kit	SW41, SW42 - SWE 43, SWE44	FPM	H310446
	1	Seal kit	SW41, SW42 - SWE 43, SWE44	VMQ	H310447
		Pos. 4, 6, 8, 9 and 10 available as complete seal kit only			
		If seat seal (pos.4) in VMQ - than housing seal (pos. 6) in HNBR			
	1	Seal kit	SWE 41, SWE42	EPDM	H175821
	1	Seal kit	SWE 41, SWE42	HNBR	H175828
	1	Seal kit	SWE 41, SWE42	FPM	H310455
	1	Seal kit	SWE 41, SWE42	VMQ	H310456
		Pos. 4, 6, 8, 9 and 10 available as complete seal kit only			
		If seat seal (pos.4) in VMQ - than housing seal (pos. 6) in HNBR			
	1	Seal kit	SW43, SW44, SW47, SW48	EPDM	H175838
	1	Seal kit	SW43, SW44, SW47, SW48	HNBR	H175844
	1	Seal kit	SW43, SW44, SW47, SW48	FPM	H205969
	1	Seal kit	SW43, SW44, SW47, SW48	VMQ	H201995
		Pos. 4, 6, 8, 9 and 10 available as complete seal kit only			
		If seat seal (pos.4) in VMQ - than housing seal (pos. 6) in HNBR			
	1	Seal kit	SWE45, SWE46, SWE47,SWE48	EPDM	H203753
	1	Seal kit	SWE45, SWE46, SWE47,SWE48	HNBR	H325420
	1	Seal kit	SWE45, SWE46, SWE47,SWE48	FPM	H325421
	1	Seal kit	SWE45, SWE46, SWE47,SWE48	VMQ	

Information contained in this document is subject to change without notice and does not represent a commitment on the part of SPX FLOW, Inc.. No part of this document may be reproduced or transmitted in any form or by any means, electronic or mechanical, including photocopying and recording, for any

Spare parts list:

Single Seat Valve SW41, SW42, SWE43, SWE44, SWE41, SWE42
Change Over Valve SW43, SW44, SW47, SW48, SWE45, SWE46, SWE47, SWE48
Device Category 2G for ATEX Zone 1
DN40

Date:	24.07.23			
Name:	Shreshth			
Approved by:	Peters			
Date:				
Name:				
Approved by:				

SPX FLOW

RN ATEX 054.805-1

Item	Quantity	Description		Material	Part no.
1	1	Housing	SW41	1.4404	H171391
1	1	Housing	SW42	1.4404	H172429
1	1	Housing	SWE43	1.4404	H169950
1	1	Housing	SWE44	1.4404	H172646
1	1	Housing upper part	SWE41	1.4404	H171395
2	1	Housing lower part		1.4404	H172765
1	1	Housing upper part	SWE42	1.4404	H172467
2	1	Housing lower part		1.4404	H172765
1	1	Housing upper part	SW43	1.4404	H171395
2	1	Housing		1.4404	H171391
1	1	Housing upper part	SW44	1.4404	H172467
2	1	Housing		1.4404	H171391
1	1	Housing upper part	SW47	1.4404	H171395
2	1	Housing		1.4404	H172429
1	1	Housing upper part	SW48	1.4404	H172467
2	1	Housing		1.4404	H172429
1	1	Housing upper part	SWE45	1.4404	H171395
2	1	Housing upper part		1.4404	H171395
3	1	Housing lower part		1.4404	H172765
1	1	Housing upper part	SWE46	1.4404	H172467
2	1	Housing upper part		1.4404	H171395
3	1	Housing lower part		1.4404	H172765
1	1	Housing upper part	SWE47	1.4404	H171395
2	1	Housing upper part		1.4404	H172467
3	1	Housing lower part		1.4404	H172765
1	1	Housing upper part	SWE48	1.4404	H171395
2	1	Housing upper part		1.4404	H171395
3	1	Housing lower part		1.4404	H311364

Item	Quantity	Description		Material	Part no.
4	1	Seat seal	SW41, SW42 SWE41, SWE42, SWE43, SWE44	EPDM	H77442
				HNBR	H170176
				FPM	H77441
				VMQ	H77440
	2	Seat seal	SW43, SW44, SW47, SW48 SWE45, SWE46, SWE47, SWE48	EPDM	H77467
				HNBR	H166676
				FPM	H77466
				VMQ	H77465
5	1	Valve shaft	SW41, SW42 SWE41, SWE42, SWE43, SWE44	1.4404	H170330
	1	Valve shaft	SW43, SW44, SW47, SW48 SWE45, SWE46, SWE47, SWE48	1.4404	H170567
6	1	Housing seal	SW41, SW42 SWE41, SWE42, SWE43, SWE44	EPDM	H77439
				HNBR	H170017
				FPM	H77438
				VMQ	
	2	Housing seal	SW43, SW44, SW47, SW48	EPDM	H77439
				HNBR	H170017
				FPM	H77438
				VMQ	
	3	Housing seal	SWE45, SWE46, SWE47, SWE48	EPDM	H77439
				HNBR	H170017
				FPM	H77438
				VMQ	
7	1	Clamp	SW41, SW42 SWE41, SWE42, SWE43, SWE44	1.4301	H126264
	2	Clamp	SW43, SW44, SW47, SW48	1.4301	H126264
	3	Clamp	SWE45, SWE46, SWE47, SWE48	1.4301	H126264
8	1	Shaft seal		Turcon MF6	H323082

Information contained in this document is subject to change without notice and does not represent a commitment on the part of SPX FLOW, Inc.. No part of this document may be reproduced or transmitted in any form or by any means, electronic or mechanical, including photocopying and recording, for any

Spare parts list:

Single Seat Valve SW41, SW42, SWE43, SWE44, SWE41, SWE42
Change Over Valve SW43, SW44, SW47, SW48, SWE45, SWE46, SWE47, SWE48
Device Category 2G for ATEX Zone 1
DN40

Date:	24.07.23			
Name:	Shreshth			
Approved by:	Peters			
Date:				
Name:				
Approved by:				

SPX FLOW

RN ATEX 054.805-1

Item	Quantity	Description		Material	Part no.
9	1	Seat seal		EPDM	H77442
				HNBR	H170176
				FPM	H77441
				VMQ	H77440
10	1	Bushing		PTFE + 25% carbon	H207154
11	1	Yoke		1.4404	H171383
12	4	Hex. screw M8x16	DIN EN 24017-A2-70	1.4301	H78772
13	1	Actuator	Ø74		H171378
14	1	Guide rod		1.4305	H171061
15	1	Centering nut		1.4301	H170196
16	1	Hex. Nut	DIN EN ISO 10511-M12-A2	A2-70	H79298
17	4	Hex. screw M8x16	DIN EN 24017-A2-70	A2-70	H78772
18	1	O-ring		NBR	H173930
19	1	Opereating cam		1.4523	H173087
20	1	Proximity switch holder housing SW4		VESTAMID	H173931
21	1	ATEX CU-S adapter complete		1.4301	H332570
22	1	IECEX CU ex ia 1 S&T 24V		1.4301	H337798

Item	Quantity	Description		Material	Part no.
		Pos. 4, 6, 8, 9 and 10 available as complete seal kit only			
		If seat seal (pos.4) in VMQ - than housing seal (pos. 6) in HNBR			
	1	Seal kit	SW41, SW42 - SWE 43, SWE44	EPDM	H175806
	1	Seal kit	SW41, SW42 - SWE 43, SWE44	HNBR	H175812
	1	Seal kit	SW41, SW42 - SWE 43, SWE44	FPM	H310448
	1	Seal kit	SW41, SW42 - SWE 43, SWE44	VMQ	H310449
		Pos. 4, 6, 8, 9 and 10 available as complete seal kit only			
		If seat seal (pos.4) in VMQ - than housing seal (pos. 6) in HNBR			
	1	Seal kit	SWE 41, SWE42	EPDM	H175822
	1	Seal kit	SWE 41, SWE42	HNBR	H175829
	1	Seal kit	SWE 41, SWE42	FPM	H310457
	1	Seal kit	SWE 41, SWE42	VMQ	H310458
		Pos. 4, 6, 8, 9 and 10 available as complete seal kit only			
		If seat seal (pos.4) in VMQ - than housing seal (pos. 6) in HNBR			
	1	Seal kit	SW43, SW44, SW47, SW48	EPDM	H175839
	1	Seal kit	SW43, SW44, SW47, SW48	HNBR	H175845
	1	Seal kit	SW43, SW44, SW47, SW48	FPM	H208217
	1	Seal kit	SW43, SW44, SW47, SW48	VMQ	H310468
		Pos. 4, 6, 8, 9 and 10 available as complete seal kit only			
		If seat seal (pos.4) in VMQ - than housing seal (pos. 6) in HNBR			
	1	Seal kit	SWE45, SWE46, SWE47,SWE48	EPDM	H203754
	1	Seal kit	SWE45, SWE46, SWE47,SWE48	HNBR	H325406
	1	Seal kit	SWE45, SWE46, SWE47,SWE48	FPM	H325405
	1	Seal kit	SWE45, SWE46, SWE47,SWE48	VMQ	

Information contained in this document is subject to change without notice and does not represent a commitment on the part of SPX FLOW, Inc.. No part of this document may be reproduced or transmitted in any form or by any means, electronic or mechanical, including photocopying and recording, for any

Spare parts list:

Single Seat Valve SW41, SW42, SWE43, SWE44, SWE41, SWE42
Change Over Valve SW43, SW44, SW47, SW48, SWE45, SWE46, SWE47, SWE48
Device Category 2G for ATEX Zone 1
1,5"

Date:	24.07.23			
Name:	Shreshth			
Approved by:	Peters			
Date:				
Name:				
Approved by:				

SPX FLOW

RN ATEX 054.805-1

Item	Quantity	Description		Material	Part no.
1	1	Housing	SW41	1.4404	H171404
1	1	Housing	SW42	1.4404	H172435
1	1	Housing	SWE43	1.4404	H172805
1	1	Housing	SWE44	1.4404	H172811
1	1	Housing upper part	SWE41	1.4404	H171400
2	1	Housing lower part		1.4404	H172712
1	1	Housing upper part	SWE42	1.4404	H172477
2	1	Housing lower part		1.4404	H172712
1	1	Housing upper part	SW43	1.4404	H171400
2	1	Housing		1.4404	H171404
1	1	Housing upper part	SW44	1.4404	H172477
2	1	Housing		1.4404	H171404
1	1	Housing upper part	SW47	1.4404	H171400
2	1	Housing		1.4404	H172435
1	1	Housing upper part	SW48	1.4404	H172477
2	1	Housing		1.4404	H172435
1	1	Housing upper part	SWE45	1.4404	H171400
2	1	Housing upper part		1.4404	H171400
3	1	Housing lower part		1.4404	H172712
1	1	Housing upper part	SWE46	1.4404	H172477
2	1	Housing upper part		1.4404	H171400
3	1	Housing lower part		1.4404	H172712
1	1	Housing upper part	SWE47	1.4404	H171400
2	1	Housing upper part		1.4404	H172477
3	1	Housing lower part		1.4404	H172712
1	1	Housing upper part	SWE48	1.4404	H171400
2	1	Housing upper part		1.4404	H171400
3	1	Housing lower part		1.4404	H202852

Item	Quantity	Description		Material	Part no.
4	1	Seat seal	SW41, SW42 SWE41, SWE42, SWE43, SWE44	EPDM	H77442
				HNBR	H170176
				FPM	H77441
				VMQ	H77440
	2	Seat seal	SW43, SW44, SW47, SW48 SWE45, SWE46, SWE47, SWE48	EPDM	H77467
				HNBR	H166676
				FPM	H77466
				VMQ	H77465
5	1	Valve shaft	SW41, SW42 SWE41, SWE42, SWE43, SWE44	1.4404	H170336
	1	Valve shaft	SW43, SW44, SW47, SW48 SWE45, SWE46, SWE47, SWE48	1.4404	H170573
6	1	Housing seal	SW41, SW42 SWE41, SWE42, SWE43, SWE44	EPDM	H77439
				HNBR	H170017
				FPM	H77438
				VMQ	
	2	Housing seal	SW43, SW44, SW47, SW48	EPDM	H77439
				HNBR	H170017
				FPM	H77438
				VMQ	
	3	Housing seal	SWE45, SWE46, SWE47, SWE48	EPDM	H77439
				HNBR	H170017
				FPM	H77438
				VMQ	
7	1	Clamp	SW41, SW42 SWE41, SWE42, SWE43, SWE44	1.4301	H126264
	2	Clamp	SW43, SW44, SW47, SW48	1.4301	H126264
	3	Clamp	SWE45, SWE46, SWE47, SWE48	1.4301	H126264
8	1	Shaft seal		Turcon MF6	H323082

Information contained in this document is subject to change without notice and does not represent a commitment on the part of SPX FLOW, Inc.. No part of this document may be reproduced or transmitted in any form or by any means, electronic or mechanical, including photocopying and recording, for any

Spare parts list:

Single Seat Valve SW41, SW42, SWE43, SWE44, SWE41, SWE42
Change Over Valve SW43, SW44, SW47, SW48, SWE45, SWE46, SWE47, SWE48
Device Category 2G for ATEX Zone 1
1,5"

Date:	24.07.23				**SPX FLOW**
Name:	Shreshth				
Approved by:	Peters				
Date:					Page 10 of 26
Name:					**RN ATEX 054.805-1**
Approved by:					

Item	Quantity	Description		Material	Part no.
9	1	Seat seal		EPDM	H77442
				HNBR	H170176
				FPM	H77441
				VMQ	H77440
10	1	Bushing		PTFE + 25% carbon	H207154
11	1	Yoke		1.4404	H171383
12	4	Hex. screw M8x16	DIN EN 24017-A2-70	1.4301	H78772
13	1	Actuator	Ø74		H171378
14	1	Guide rod		1.4305	H171061
15	1	Centering nut		1.4301	H170196
16	1	Hex. Nut	DIN EN ISO 10511-M12-A2	A2-70	H79298
17	4	Hex. screw M8x16	DIN EN 24017-A2-70	A2-70	H78772
18	1	O-ring		NBR	H173930
19	1	Opereating cam		1.4523	H173087
20	1	Proximity switch holder housing SW4		VESTAMID	H173931
21	1	ATEX CU-S adapter complete		1.4301	H332570
22	1	IECEX CU ex ia 1 S&T 24V		1.4301	H337798

Item	Quantity	Description		Material	Part no.
		Pos. 12,13 und 17 available as complete seal kit only			
		If seat seal (pos.17) in VMQ - than housing seal (pos. 13) in HNBR			
	1	Seal kit	SW 41, 42, SWE 43, 44	EPDM	H175806
	1	Seal kit	SW 41, 42, SWE 43, 44	HNBR	H175812
	1	Seal kit	SW 41, 42, SWE 43, 44	FPM	H310448
	1	Seal kit	SW 41, 42, SWE 43, 44	VMQ	H310449
		Pos. 4, 6, 8, 9 and 10 available as complete seal kit only			
		If seat seal (pos.4) in VMQ - than housing seal (pos. 6) in HNBR			
	1	Seal kit	SWE 41, SWE42	EPDM	H175822
	1	Seal kit	SWE 41, SWE42	HNBR	H175829
	1	Seal kit	SWE 41, SWE42	FPM	H310457
	1	Seal kit	SWE 41, SWE42	VMQ	H310458
		Pos. 4, 6, 8, 9 and 10 available as complete seal kit only			
		If seat seal (pos.4) in VMQ - than housing seal (pos. 6) in HNBR			
	1	Seal kit	SW43, SW44, SW47, SW48	EPDM	H175839
	1	Seal kit	SW43, SW44, SW47, SW48	HNBR	H175845
	1	Seal kit	SW43, SW44, SW47, SW48	FPM	H208217
	1	Seal kit	SW43, SW44, SW47, SW48	VMQ	H310468
		Pos. 4, 6, 8, 9 and 10 available as complete seal kit only			
		If seat seal (pos.4) in VMQ - than housing seal (pos. 6) in HNBR			
	1	Seal kit	SWE45, SWE46, SWE47,SWE48	EPDM	H203754
	1	Seal kit	SWE45, SWE46, SWE47,SWE48	HNBR	H325406
	1	Seal kit	SWE45, SWE46, SWE47,SWE48	FPM	H325405
	1	Seal kit	SWE45, SWE46, SWE47,SWE48	VMQ	

Information contained in this document is subject to change without notice and does not represent a commitment on the part of SPX FLOW, Inc.. No part of this document may be reproduced or transmitted in any form or by any means, electronic or mechanical, including photocopying and recording, for any

Spare parts list:

Single Seat Valve SW41, SW42, SWE43, SWE44, SWE41, SWE42
Change Over Valve SW43, SW44, SW47, SW48, SWE45, SWE46, SWE47, SWE48
Device Category 2G for ATEX Zone 1
DN50

Date:	24.07.23			
Name:	Shreshth			
Approved by:	Peters			
Date:				
Name:				
Approved by:				

SPX FLOW

RN ATEX 054.805-1

Item	Quantity	Description		Material	Part no.
1	1	Housing	SW41	1.4404	H168596
1	1	Housing	SW42	1.4404	H172430
1	1	Housing	SWE43	1.4404	H169951
1	1	Housing	SWE44	1.4404	H172647
1	1	Housing upper part	SWE41	1.4404	H168601
2	1	Housing lower part	SWE41	1.4404	H172687
1	1	Housing upper part	SWE42	1.4404	H172468
2	1	Housing lower part	SWE42	1.4404	H172687
1	1	Housing upper part	SW43	1.4404	H168601
2	1	Housing	SW43	1.4404	H168596
1	1	Housing upper part	SW44	1.4404	H172468
2	1	Housing	SW44	1.4404	H168596
1	1	Housing upper part	SW47	1.4404	H168601
2	1	Housing	SW47	1.4404	H172430
1	1	Housing upper part	SW48	1.4404	H172468
2	1	Housing	SW48	1.4404	H172430
1	1	Housing upper part	SWE45	1.4404	H168601
2	1	Housing upper part	SWE45	1.4404	H168601
3	1	Housing lower part	SWE45	1.4404	H172687
1	1	Housing upper part	SWE46	1.4404	H172468
2	1	Housing upper part	SWE46	1.4404	H168601
3	1	Housing lower part	SWE46	1.4404	H172687
1	1	Housing upper part	SWE47	1.4404	H168601
2	1	Housing upper part	SWE47	1.4404	H172468
3	1	Housing lower part	SWE47	1.4404	H172687
1	1	Housing upper part	SWE48	1.4404	H168601
2	1	Housing upper part	SWE48	1.4404	H168601
3	1	Housing lower part	SWE48	1.4404	H311365

Item	Quantity	Description		Material	Part no.
4	1	Seat seal	SW41, SW42 SWE41, SWE42, SWE43, SWE44	EPDM	H77491
				HNBR	H166085
				FPM	H77490
				VMQ	H77489
	2	Seat seal	SW43, SW44, SW47, SW48 SWE45, SWE46, SWE47, SWE48	EPDM	H77491
				HNBR	H166085
				FPM	H77490
				VMQ	H77489
5	1	Valve shaft	SW41, SW42 SWE41, SWE42, SWE43, SWE44	1.4404	H170331
	1	Valve shaft	SW43, SW44, SW47, SW48 SWE45, SWE46, SWE47, SWE48	1.4404	H170568
6	1	Housing seal	SW41, SW42 SWE41, SWE42, SWE43, SWE44	EPDM	H170665
				HNBR	H170654
				FPM	H170666
				VMQ	
	2	Housing seal	SW43, SW44, SW47, SW48	EPDM	H170665
				HNBR	H170654
				FPM	H170666
				VMQ	
	3	Housing seal	SWE45, SWE46, SWE47, SWE48	EPDM	H170665
				HNBR	H170654
				FPM	H170666
				VMQ	
7	1	Clamp	SW41, SW42 SWE41, SWE42, SWE43, SWE44	1.4301	H126265
	2	Clamp	SW43, SW44, SW47, SW48	1.4301	H126265
	3	Clamp	SWE45, SWE46, SWE47, SWE48	1.4301	H126265
8	1	Shaft seal		Turcon MF6	H323082

Information contained in this document is subject to change without notice and does not represent a commitment on the part of SPX FLOW, Inc.. No part of this document may be reproduced or transmitted in any form or by any means, electronic or mechanical, including photocopying and recording, for any

Spare parts list:

Single Seat Valve SW41, SW42, SWE43, SWE44, SWE41, SWE42
Change Over Valve SW43, SW44, SW47, SW48, SWE45, SWE46, SWE47, SWE48
Device Category 2G for ATEX Zone 1
DN50

Date:	24.07.23			
Name:	Shreshth			
Approved by:	Peters			
Date:				
Name:				
Approved by:				

SPX FLOW

RN ATEX 054.805-1

Item	Quantity	Description		Material	Part no.
9	1	Seat seal		EPDM	H77442
				HNBR	H170176
				FPM	H77441
				VMQ	H77440
10	1	Bushing		PTFE + 25% carbon	H207154
11	1	Yoke		1.4404	H171384
12	4	Hex. screw M8x16	DIN EN 24017-A2-70	1.4301	H78772
13	1	Actuator	Ø110		H171379
14	1	Guide rod		1.4305	H171062
15	1	Centering nut		1.4301	H170196
16	1	Hex. Nut	DIN EN ISO 10511-M12-A2	A2-70	H79298
17	4	Hex. screw M8x16	DIN EN 24017-A2-70	A2-70	H78772
18	1	O-ring		NBR	H173930
19	1	Opereating cam		1.4523	H173087
20	1	Proximity switch holder housing SW4		VESTAMID	H173931
21	1	ATEX CU-S adapter complete		1.4301	H332570
22	1	IECEX CU ex ia 1 S&T 24V		1.4301	H337798

Item	Quantity	Description		Material	Part no.
		Pos. 12,13 und 17 available as complete seal kit only			
		If seat seal (pos.17) in VMQ - than housing seal (pos. 13) in HNBR			
	1	Seal kit	SW 41, 42, SWE 43, 44	EPDM	H175807
	1	Seal kit	SW 41, 42, SWE 43, 44	HNBR	H175813
	1	Seal kit	SW 41, 42, SWE 43, 44	FPM	H203385
	1	Seal kit	SW 41, 42, SWE 43, 44	VMQ	H201991
		Pos. 4, 6, 8, 9 and 10 available as complete seal kit only			
		If seat seal (pos.4) in VMQ - than housing seal (pos. 6) in HNBR			
	1	Seal kit	SWE 41, SWE42	EPDM	H175824
	1	Seal kit	SWE 41, SWE42	HNBR	H175830
	1	Seal kit	SWE 41, SWE42	FPM	H310459
	1	Seal kit	SWE 41, SWE42	VMQ	H205952
		Pos. 4, 6, 8, 9 and 10 available as complete seal kit only			
		If seat seal (pos.4) in VMQ - than housing seal (pos. 6) in HNBR			
	1	Seal kit	SW43, SW44, SW47, SW48	EPDM	H175840
	1	Seal kit	SW43, SW44, SW47, SW48	HNBR	H175846
	1	Seal kit	SW43, SW44, SW47, SW48	FPM	H205908
	1	Seal kit	SW43, SW44, SW47, SW48	VMQ	H177396
		Pos. 4, 6, 8, 9 and 10 available as complete seal kit only			
		If seat seal (pos.4) in VMQ - than housing seal (pos. 6) in HNBR			
	1	Seal kit	SWE45, SWE46, SWE47,SWE48	EPDM	H203755
	1	Seal kit	SWE45, SWE46, SWE47,SWE48	HNBR	H325411
	1	Seal kit	SWE45, SWE46, SWE47,SWE48	FPM	H325412
	1	Seal kit	SWE45, SWE46, SWE47,SWE48	VMQ	

Information contained in this document is subject to change without notice and does not represent a commitment on the part of SPX FLOW, Inc.. No part of this document may be reproduced or transmitted in any form or by any means, electronic or mechanical, including photocopying and recording, for any

Spare parts list:

Single Seat Valve SW41, SW42, SWE43, SWE44, SWE41, SWE42
Change Over Valve SW43, SW44, SW47, SW48, SWE45, SWE46, SWE47, SWE48
Device Category 2G for ATEX Zone 1
2"

Date:	24.07.23			
Name:	Shreshth			
Approved by:	Peters			
Date:				
Name:				
Approved by:				

SPX FLOW

RN ATEX 054.805-1

Item	Quantity	Description		Material	Part no.
1	1	Housing	SW41	1.4404	H168747
1	1	Housing	SW42	1.4404	H172436
1	1	Housing	SWE43	1.4404	H172806
1	1	Housing	SWE44	1.4404	H172812
1	1	Housing upper part	SWE41	1.4404	H168753
2	1	Housing lower part		1.4404	H172713
1	1	Housing upper part	SWE42	1.4404	H172478
2	1	Housing lower part		1.4404	H172713
1	1	Housing upper part	SW43	1.4404	H168753
2	1	Housing		1.4404	H168747
1	1	Housing upper part	SW44	1.4404	H172478
2	1	Housing		1.4404	H168747
1	1	Housing upper part	SW47	1.4404	H168753
2	1	Housing		1.4404	H172436
1	1	Housing upper part	SW48	1.4404	H172478
2	1	Housing		1.4404	H172436
1	1	Housing upper part	SWE45	1.4404	H168753
2	1	Housing upper part		1.4404	H168753
3	1	Housing lower part		1.4404	H172713
1	1	Housing upper part	SWE46	1.4404	H172478
2	1	Housing upper part		1.4404	H168753
3	1	Housing lower part		1.4404	H172713
1	1	Housing upper part	SWE47	1.4404	H168753
2	1	Housing upper part		1.4404	H172478
3	1	Housing lower part		1.4404	H172713
1	1	Housing upper part	SWE48	1.4404	H168753
2	1	Housing upper part		1.4404	H168753
3	1	Housing lower part		1.4404	H311368

Item	Quantity	Description		Material	Part no.
4	1	Seat seal	SW41, SW42 SWE41, SWE42, SWE43, SWE44	EPDM	H77491
				HNBR	H166085
				FPM	H77490
				VMQ	H77489
	2	Seat seal	SW43, SW44, SW47, SW48 SWE45, SWE46, SWE47, SWE48	EPDM	H77491
				HNBR	H166085
				FPM	H77490
				VMQ	H77489
5	1	Valve shaft	SW41, SW42 SWE41, SWE42, SWE43, SWE44	1.4404	H170337
	1	Valve shaft	SW43, SW44, SW47, SW48 SWE45, SWE46, SWE47, SWE48	1.4404	H170574
6	1	Housing seal	SW41, SW42 SWE41, SWE42, SWE43, SWE44	EPDM	H170665
				HNBR	H170654
				FPM	H170666
				VMQ	
	2	Housing seal	SW43, SW44, SW47, SW48	EPDM	H170665
				HNBR	H170654
				FPM	H170666
				VMQ	
	3	Housing seal	SWE45, SWE46, SWE47, SWE48	EPDM	H170665
				HNBR	H170654
				FPM	H170666
				VMQ	
7	1	Clamp	SW41, SW42 SWE41, SWE42, SWE43, SWE44	1.4301	H126265
	2	Clamp	SW43, SW44, SW47, SW48	1.4301	H126265
	3	Clamp	SWE45, SWE46, SWE47, SWE48	1.4301	H126265
8	1	Shaft seal		Turcon MF6	H323082

Information contained in this document is subject to change without notice and does not represent a commitment on the part of SPX FLOW, Inc.. No part of this document may be reproduced or transmitted in any form or by any means, electronic or mechanical, including photocopying and recording, for any

Spare parts list:

Single Seat Valve SW41, SW42, SWE43, SWE44, SWE41, SWE42
Change Over Valve SW43, SW44, SW47, SW48, SWE45, SWE46, SWE47, SWE48
Device Category 2G for ATEX Zone 1
2"

Date:	24.07.23				**SPX FLOW**
Name:	Shreshth				
Approved by:	Peters				
Date:					Page 14 of 26
Name:					**RN ATEX 054.805-1**
Approved by:					

Item	Quantity	Description		Material	Part no.
9	1	Seat seal		EPDM	H77442
				HNBR	H170176
				FPM	H77441
				VMQ	H77440
10	1	Bushing		PTFE + 25% carbon	H207154
11	1	Yoke		1.4404	H171384
12	4	Hex. screw M8x16	DIN EN 24017-A2-70	1.4301	H78772
13	1	Actuator	Ø110		H171379
14	1	Guide rod		1.4305	H171062
15	1	Centering nut		1.4301	H170196
16	1	Hex. Nut	DIN EN ISO 10511-M12-A2	A2-70	H79298
17	4	Hex. screw M8x16	DIN EN 24017-A2-70	A2-70	H78772
18	1	O-ring		NBR	H173930
19	1	Opereating cam		1.4523	H173087
20	1	Proximity switch holder housing SW4		VESTAMID	H173931
21	1	ATEX CU-S adapter complete		1.4301	H332570
22	1	IECEX CU ex ia 1 S&T 24V		1.4301	H337798

Item	Quantity	Description		Material	Part no.
		Pos. 12,13 und 17 available as complete seal kit only			
		If seat seal (pos.17) in VMQ - than housing seal (pos. 13) in HNBR			
	1	Seal kit	SW 41, 42, SWE 43, 44	EPDM	H175807
	1	Seal kit	SW 41, 42, SWE 43, 44	HNBR	H175813
	1	Seal kit	SW 41, 42, SWE 43, 44	FPM	H203385
	1	Seal kit	SW 41, 42, SWE 43, 44	VMQ	H201991
		Pos. 4, 6, 8, 9 and 10 available as complete seal kit only			
		If seat seal (pos.4) in VMQ - than housing seal (pos. 6) in HNBR			
	1	Seal kit	SWE 41, SWE42	EPDM	H175824
	1	Seal kit	SWE 41, SWE42	HNBR	H175830
	1	Seal kit	SWE 41, SWE42	FPM	H310459
	1	Seal kit	SWE 41, SWE42	VMQ	H205952
		Pos. 4, 6, 8, 9 and 10 available as complete seal kit only			
		If seat seal (pos.4) in VMQ - than housing seal (pos. 6) in HNBR			
	1	Seal kit	SW43, SW44, SW47, SW48	EPDM	H175840
	1	Seal kit	SW43, SW44, SW47, SW48	HNBR	H175846
	1	Seal kit	SW43, SW44, SW47, SW48	FPM	H205908
	1	Seal kit	SW43, SW44, SW47, SW48	VMQ	H177396
		Pos. 4, 6, 8, 9 and 10 available as complete seal kit only			
		If seat seal (pos.4) in VMQ - than housing seal (pos. 6) in HNBR			
	1	Seal kit	SWE45, SWE46, SWE47,SWE48	EPDM	H203755
	1	Seal kit	SWE45, SWE46, SWE47,SWE48	HNBR	H325411
	1	Seal kit	SWE45, SWE46, SWE47,SWE48	FPM	H325412
	1	Seal kit	SWE45, SWE46, SWE47,SWE48	VMQ	

Information contained in this document is subject to change without notice and does not represent a commitment on the part of SPX FLOW, Inc.. No part of this document may be reproduced or transmitted in any form or by any means, electronic or mechanical, including photocopying and recording, for any

Spare parts list:

Single Seat Valve SW41, SW42, SWE43, SWE44, SWE41, SWE42
Change Over Valve SW43, SW44, SW47, SW48, SWE45, SWE46, SWE47, SWE48
Device Category 2G for ATEX Zone 1
DN65

Date:	24.07.23			
Name:	Shreshth			
Approved by:	Peters			
Date:				
Name:				
Approved by:				

SPX FLOW

RN ATEX 054.805-1

Item	Quantity	Description		Material	Part no.
1	1	Housing	SW41	1.4404	H168644
1	1	Housing	SW42	1.4404	H172431
1	1	Housing	SWE43	1.4404	H169952
1	1	Housing	SWE44	1.4404	H172648
1	1	Housing upper part	SWE41	1.4404	H168649
2	1	Housing lower part		1.4404	H172688
1	1	Housing upper part	SWE42	1.4404	H172469
2	1	Housing lower part		1.4404	H172688
1	1	Housing upper part	SW43	1.4404	H168649
2	1	Housing		1.4404	H168644
1	1	Housing upper part	SW44	1.4404	H172469
2	1	Housing		1.4404	H168644
1	1	Housing upper part	SW47	1.4404	H168649
2	1	Housing		1.4404	H172431
1	1	Housing upper part	SW48	1.4404	H172469
2	1	Housing		1.4404	H172431
1	1	Housing upper part	SWE45	1.4404	H168649
2	1	Housing upper part		1.4404	H168649
3	1	Housing lower part		1.4404	H172688
1	1	Housing upper part	SWE46	1.4404	H172469
2	1	Housing upper part		1.4404	H168649
3	1	Housing lower part		1.4404	H172688
1	1	Housing upper part	SWE47	1.4404	H168649
2	1	Housing upper part		1.4404	H172469
3	1	Housing lower part		1.4404	H172688
1	1	Housing upper part	SWE48	1.4404	H168649
2	1	Housing upper part		1.4404	H168649
3	1	Housing lower part		1.4404	H201534

Item	Quantity	Description		Material	Part no.
4	1	Seat seal	SW41, SW42 SWE41, SWE42, SWE43, SWE44	EPDM	H77515
				HNBR	H166678
				FPM	H77514
				VMQ	H77513
	2	Seat seal	SW43, SW44, SW47, SW48 SWE45, SWE46, SWE47, SWE48	EPDM	H77515
				HNBR	H166678
				FPM	H77514
				VMQ	H77513
5	1	Valve shaft	SW41, SW42 SWE41, SWE42, SWE43, SWE44	1.4404	H170332
	1	Valve shaft	SW43, SW44, SW47, SW48 SWE45, SWE46, SWE47, SWE48	1.4404	H170569
6	1	Housing seal	SW41, SW42 SWE41, SWE42, SWE43, SWE44	EPDM	H77488
				HNBR	H168714
				FPM	H77487
				VMQ	
	2	Housing seal	SW43, SW44, SW47, SW48	EPDM	H77488
				HNBR	H168714
				FPM	H77487
				VMQ	
	3	Housing seal	SWE45, SWE46, SWE47, SWE48	EPDM	H77488
				HNBR	H168714
				FPM	H77487
				VMQ	
7	1	Clamp	SW41, SW42 SWE41, SWE42, SWE43, SWE44	1.4301	H126266
	2	Clamp	SW43, SW44, SW47, SW48	1.4301	H126266
	3	Clamp	SWE45, SWE46, SWE47, SWE48	1.4301	H126266
8	1	Shaft seal		Turcon MF6	H323082

Information contained in this document is subject to change without notice and does not represent a commitment on the part of SPX FLOW, Inc.. No part of this document may be reproduced or transmitted in any form or by any means, electronic or mechanical, including photocopying and recording, for any

Spare parts list:

Single Seat Valve SW41, SW42, SWE43, SWE44, SWE41, SWE42
Change Over Valve SW43, SW44, SW47, SW48, SWE45, SWE46, SWE47, SWE48
Device Category 2G for ATEX Zone 1
DN65

Date:	24.07.23			
Name:	Shreshth			
Approved by:	Peters			
Date:				
Name:				
Approved by:				

SPX FLOW

RN ATEX 054.805-1

Item	Quantity	Description		Material	Part no.
9	1	Seat seal		EPDM	H77442
				HNBR	H170176
				FPM	H77441
				VMQ	H77440
10	1	Bushing		PTFE + 25% carbon	H207154
11	1	Yoke		1.4404	H171385
12	4	Hex. screw M8x16	DIN EN 24017-A2-70	1.4301	H78772
13	1	Actuator	Ø110		H171379
14	1	Guide rod		1.4305	H171062
15	1	Centering nut		1.4301	H170196
16	1	Hex. Nut	DIN EN ISO 10511-M12-A2	A2-70	H79298
17	4	Hex. screw M8x16	DIN EN 24017-A2-70	A2-70	H78772
18	1	O-ring		NBR	H173930
19	1	Opereating cam		1.4523	H173087
20	1	Proximity switch holder housing SW4		VESTAMID	H173931
21	1	ATEX CU-S adapter complete		1.4301	H332570
22	1	IECEX CU ex ia 1 S&T 24V		1.4301	H337798

Item	Quantity	Description		Material	Part no.
		Pos. 12,13 und 17 available as complete seal kit only			
		If seat seal (pos.17) in VMQ - than housing seal (pos. 13) in HNBR			
	1	Seal kit	SW 41, 42, SWE 43, 44	EPDM	H175808
	1	Seal kit	SW 41, 42, SWE 43, 44	HNBR	H175814
	1	Seal kit	SW 41, 42, SWE 43, 44	FPM	H310450
	1	Seal kit	SW 41, 42, SWE 43, 44	VMQ	H202920
		Pos. 4, 6, 8, 9 and 10 available as complete seal kit only			
		If seat seal (pos.4) in VMQ - than housing seal (pos. 6) in HNBR			
	1	Seal kit	SWE 41, SWE42	EPDM	H175825
	1	Seal kit	SWE 41, SWE42	HNBR	H175831
	1	Seal kit	SWE 41, SWE42	FPM	H310461
	1	Seal kit	SWE 41, SWE42	VMQ	H204026
		Pos. 4, 6, 8, 9 and 10 available as complete seal kit only			
		If seat seal (pos.4) in VMQ - than housing seal (pos. 6) in HNBR			
	1	Seal kit	SW43, SW44, SW47, SW48	EPDM	H175841
	1	Seal kit	SW43, SW44, SW47, SW48	HNBR	H175847
	1	Seal kit	SW43, SW44, SW47, SW48	FPM	H203386
	1	Seal kit	SW43, SW44, SW47, SW48	VMQ	H177395
		Pos. 4, 6, 8, 9 and 10 available as complete seal kit only			
		If seat seal (pos.4) in VMQ - than housing seal (pos. 6) in HNBR			
	1	Seal kit	SWE45, SWE46, SWE47,SWE48	EPDM	H203756
	1	Seal kit	SWE45, SWE46, SWE47,SWE48	HNBR	H325423
	1	Seal kit	SWE45, SWE46, SWE47,SWE48	FPM	H325424
	1	Seal kit	SWE45, SWE46, SWE47,SWE48	VMQ	

Information contained in this document is subject to change without notice and does not represent a commitment on the part of SPX FLOW, Inc.. No part of this document may be reproduced or transmitted in any form or by any means, electronic or mechanical, including photocopying and recording, for any

Spare parts list:

Single Seat Valve SW41, SW42, SWE43, SWE44, SWE41, SWE42
Change Over Valve SW43, SW44, SW47, SW48, SWE45, SWE46, SWE47, SWE48
Device Category 2G for ATEX Zone 1
2,5"

Date:	24.07.23			
Name:	Shreshth			
Approved by:	Peters			
Date:				
Name:				
Approved by:				

SPX FLOW

RN ATEX 054.805-1

Item	Quantity	Description		Material	Part no.
1	1	Housing	SW41	1.4404	H168762
1	1	Housing	SW42	1.4404	H172437
1	1	Housing	SWE43	1.4404	H172807
1	1	Housing	SWE44	1.4404	H172813
1	1	Housing upper part	SWE41	1.4404	H168767
2	1	Housing lower part		1.4404	H172714
1	1	Housing upper part	SWE42	1.4404	H172479
2	1	Housing lower part		1.4404	H172714
1	1	Housing upper part	SW43	1.4404	H168767
2	1	Housing		1.4404	H168762
1	1	Housing upper part	SW44	1.4404	H172479
2	1	Housing		1.4404	H168762
1	1	Housing upper part	SW47	1.4404	H168767
2	1	Housing		1.4404	H172437
1	1	Housing upper part	SW48	1.4404	H172479
2	1	Housing		1.4404	H172437
1	1	Housing upper part	SWE45	1.4404	H168767
2	1	Housing upper part		1.4404	H168767
3	1	Housing lower part		1.4404	H172714
1	1	Housing upper part	SWE46	1.4404	H172479
2	1	Housing upper part		1.4404	H168767
3	1	Housing lower part		1.4404	H172714
1	1	Housing upper part	SWE47	1.4404	H168767
2	1	Housing upper part		1.4404	H172479
3	1	Housing lower part		1.4404	H172714
1	1	Housing upper part	SWE48	1.4404	H168767
2	1	Housing upper part		1.4404	H168767
3	1	Housing lower part		1.4404	H207429

Item	Quantity	Description		Material	Part no.
4	1	Seat seal	SW41, SW42 SWE41, SWE42, SWE43, SWE44	EPDM	H170662
				HNBR	H170658
				FPM	H170663
				VMQ	H170664
	2	Seat seal	SW43, SW44, SW47, SW48 SWE45, SWE46, SWE47, SWE48	EPDM	H170662
				HNBR	H170658
				FPM	H170663
				VMQ	H170664
5	1	Valve shaft	SW41, SW42 SWE41, SWE42, SWE43, SWE44	1.4404	H170338
	1	Valve shaft	SW43, SW44, SW47, SW48 SWE45, SWE46, SWE47, SWE48	1.4404	H170575
6	1	Housing seal	SW41, SW42 SWE41, SWE42, SWE43, SWE44	EPDM	H170667
				HNBR	H170655
				FPM	H170668
				VMQ	
	2	Housing seal	SW43, SW44, SW47, SW48	EPDM	H170667
				HNBR	H170655
				FPM	H170668
				VMQ	
	3	Housing seal	SWE45, SWE46, SWE47, SWE48	EPDM	H170667
				HNBR	H170655
				FPM	H170668
				VMQ	
7	1	Clamp	SW41, SW42 SWE41, SWE42, SWE43, SWE44	1.4301	H126266
	2	Clamp	SW43, SW44, SW47, SW48	1.4301	H126266
	3	Clamp	SWE45, SWE46, SWE47, SWE48	1.4301	H126266
8	1	Shaft seal		Turcon MF6	H323082

Information contained in this document is subject to change without notice and does not represent a commitment on the part of SPX FLOW, Inc.. No part of this document may be reproduced or transmitted in any form or by any means, electronic or mechanical, including photocopying and recording, for any

Spare parts list:

Single Seat Valve SW41, SW42, SWE43, SWE44, SWE41, SWE42
Change Over Valve SW43, SW44, SW47, SW48, SWE45, SWE46, SWE47, SWE48
Device Category 2G for ATEX Zone 1
2,5"

Date:	24.07.23			
Name:	Shreshth			
Approved by:	Peters			
Date:				
Name:				
Approved by:				

SPX FLOW

RN ATEX 054.805-1

Item	Quantity	Description		Material	Part no.
9	1	Seat seal		EPDM	H77442
				HNBR	H170176
				FPM	H77441
				VMQ	H77440
10	1	Bushing		PTFE + 25% carbon	H207154
11	1	Yoke		1.4404	H171385
12	4	Hex. screw M8x16	DIN EN 24017-A2-70	1.4301	H78772
13	1	Actuator	Ø110		H171379
14	1	Guide rod		1.4305	H171062
15	1	Centering nut		1.4301	H170196
16	1	Hex. Nut	DIN EN ISO 10511-M12-A2	A2-70	H79298
17	4	Hex. screw M8x16	DIN EN 24017-A2-70	A2-70	H78772
18	1	O-ring		NBR	H173930
19	1	Opereating cam		1.4523	H173087
20	1	Proximity switch holder housing SW4		VESTAMID	H173931
21	1	ATEX CU-S adapter complete		1.4301	H332570
22	1	IECEX CU ex ia 1 S&T 24V		1.4301	H337798

Item	Quantity	Description		Material	Part no.
		Pos. 12,13 und 17 available as complete seal kit only			
		If seat seal (pos.17) in VMQ - than housing seal (pos. 13) in HNBR			
	1	Seal kit	SW 41, 42, SWE 43, 44	EPDM	H175817
	1	Seal kit	SW 41, 42, SWE 43, 44	HNBR	H175819
	1	Seal kit	SW 41, 42, SWE 43, 44	FPM	H310451
	1	Seal kit	SW 41, 42, SWE 43, 44	VMQ	H201992
		Pos. 4, 6, 8, 9 and 10 available as complete seal kit only			
		If seat seal (pos.4) in VMQ - than housing seal (pos. 6) in HNBR			
	1	Seal kit	SWE 41, SWE42	EPDM	H175834
	1	Seal kit	SWE 41, SWE42	HNBR	H175836
	1	Seal kit	SWE 41, SWE42	FPM	H310460
	1	Seal kit	SWE 41, SWE42	VMQ	H205953
		Pos. 4, 6, 8, 9 and 10 available as complete seal kit only			
		If seat seal (pos.4) in VMQ - than housing seal (pos. 6) in HNBR			
	1	Seal kit	SW43, SW44, SW47, SW48	EPDM	H175850
	1	Seal kit	SW43, SW44, SW47, SW48	HNBR	H175852
	1	Seal kit	SW43, SW44, SW47, SW48	FPM	H205606
	1	Seal kit	SW43, SW44, SW47, SW48	VMQ	H201996
		Pos. 4, 6, 8, 9 and 10 available as complete seal kit only			
		If seat seal (pos.4) in VMQ - than housing seal (pos. 6) in HNBR			
	1	Seal kit	SWE45, SWE46, SWE47,SWE48	EPDM	H203760
	1	Seal kit	SWE45, SWE46, SWE47,SWE48	HNBR	H325409
	1	Seal kit	SWE45, SWE46, SWE47,SWE48	FPM	H325410
	1	Seal kit	SWE45, SWE46, SWE47,SWE48	VMQ	

Information contained in this document is subject to change without notice and does not represent a commitment on the part of SPX FLOW, Inc.. No part of this document may be reproduced or transmitted in any form or by any means, electronic or mechanical, including photocopying and recording, for any

Spare parts list:

Single Seat Valve SW41, SW42, SWE43, SWE44, SWE41, SWE42
Change Over Valve SW43, SW44, SW47, SW48, SWE45, SWE46, SWE47, SWE48
Device Category 2G for ATEX Zone 1
DN80

Date:	24.07.23			
Name:	Shreshth			
Approved by:	Peters			
Date:				
Name:				
Approved by:				

SPX FLOW

RN ATEX 054.805-1

Item	Quantity	Description		Material	Part no.
1	1	Housing	SW41	1.4404	H168630
1	1	Housing	SW42	1.4404	H172432
1	1	Housing	SWE43	1.4404	H169953
1	1	Housing	SWE44	1.4404	H173728
1	1	Housing upper part	SWE41	1.4404	H168638
2	1	Housing lower part		1.4404	H172689
1	1	Housing upper part	SWE42	1.4404	H172470
2	1	Housing lower part		1.4404	H172689
1	1	Housing upper part	SW43	1.4404	H168638
2	1	Housing		1.4404	H168630
1	1	Housing upper part	SW44	1.4404	H172470
2	1	Housing		1.4404	H168630
1	1	Housing upper part	SW47	1.4404	H168638
2	1	Housing		1.4404	H172432
1	1	Housing upper part	SW48	1.4404	H172470
2	1	Housing		1.4404	H172432
1	1	Housing upper part	SWE45	1.4404	H168638
2	1	Housing upper part		1.4404	H168638
3	1	Housing lower part		1.4404	H172689
1	1	Housing upper part	SWE46	1.4404	H172470
2	1	Housing upper part		1.4404	H168638
3	1	Housing lower part		1.4404	H172689
1	1	Housing upper part	SWE47	1.4404	H168638
2	1	Housing upper part		1.4404	H172470
3	1	Housing lower part		1.4404	H172689
1	1	Housing upper part	SWE48	1.4404	H168638
2	1	Housing upper part		1.4404	H168638
3	1	Housing lower part		1.4404	H202935

Item	Quantity	Description		Material	Part no.
4	1	Seat seal	SW41, SW42 SWE41, SWE42, SWE43, SWE44	EPDM	H77546
				HNBR	H166681
				FPM	H77545
				VMQ	H77544
	2	Seat seal	SW43, SW44, SW47, SW48 SWE45, SWE46, SWE47, SWE48	EPDM	H77546
				HNBR	H166681
				FPM	H77545
				VMQ	H77544
5	1	Valve shaft	SW41, SW42 SWE41, SWE42, SWE43, SWE44	1.4404	H170333
	1	Valve shaft	SW43, SW44, SW47, SW48 SWE45, SWE46, SWE47, SWE48	1.4404	H170570
6	1	Housing seal	SW41, SW42 SWE41, SWE42, SWE43, SWE44	EPDM	H77512
				HNBR	H168759
				FPM	H77511
				VMQ	
	2	Housing seal	SW43, SW44, SW47, SW48	EPDM	H77512
				HNBR	H168759
				FPM	H77511
				VMQ	
	3	Housing seal	SWE45, SWE46, SWE47, SWE48	EPDM	H77512
				HNBR	H168759
				FPM	H77511
				VMQ	
7	1	Clamp	SW41, SW42 SWE41, SWE42, SWE43, SWE44	1.4301	H126267
	2	Clamp	SW43, SW44, SW47, SW48	1.4301	H126267
	3	Clamp	SWE45, SWE46, SWE47, SWE48	1.4301	H126267
8	1	Shaft seal		Turcon MF6	H323082

Information contained in this document is subject to change without notice and does not represent a commitment on the part of SPX FLOW, Inc.. No part of this document may be reproduced or transmitted in any form or by any means, electronic or mechanical, including photocopying and recording, for any

Spare parts list:

Single Seat Valve SW41, SW42, SWE43, SWE44, SWE41, SWE42
Change Over Valve SW43, SW44, SW47, SW48, SWE45, SWE46, SWE47, SWE48
Device Category 2G for ATEX Zone 1
DN80

Date:	24.07.23			
Name:	Shreshth			
Approved by:	Peters			
Date:				
Name:				
Approved by:				

SPX FLOW

RN ATEX 054.805-1

Item	Quantity	Description		Material	Part no.
9	1	Seat seal		EPDM	H77442
				HNBR	H170176
				FPM	H77441
				VMQ	H77440
10	1	Bushing		PTFE + 25% carbon	H207154
11	1	Yoke		1.4404	H171386
12	4	Hex. screw M8x20	DIN EN 24017-A2-70	1.4301	H78776
13	1	Actuator	Ø165		H171380
14	1	Guide rod		1.4305	H171063
15	1	Centering nut		1.4301	H170196
16	1	Hex. Nut	DIN EN ISO 10511-M12-A2	A2-70	H79298
17	4	Hex. screw M8x16	DIN EN 24017-A2-70	A2-70	H78772
18	1	O-ring		NBR	H173930
19	1	Opereating cam		1.4523	H173087
20	1	Proximity switch holder housing SW4		VESTAMID	H173931
21	1	ATEX CU-S adapter complete		1.4301	H332570
22	1	IECEX CU ex ia 1 S&T 24V		1.4301	H337798

Item	Quantity	Description		Material	Part no.
		Pos. 12,13 und 17 available as complete seal kit only			
		If seat seal (pos.17) in VMQ - than housing seal (pos. 13) in HNBR			
	1	Seal kit	SW 41, 42, SWE 43, 44	EPDM	H175809
	1	Seal kit	SW 41, 42, SWE 43, 44	HNBR	H175815
	1	Seal kit	SW 41, 42, SWE 43, 44	FPM	H203384
	1	Seal kit	SW 41, 42, SWE 43, 44	VMQ	H310452
		Pos. 4, 6, 8, 9 and 10 available as complete seal kit only			
		If seat seal (pos.4) in VMQ - than housing seal (pos. 6) in HNBR			
	1	Seal kit	SWE 41, SWE42	EPDM	H175826
	1	Seal kit	SWE 41, SWE42	HNBR	H175832
	1	Seal kit	SWE 41, SWE42	FPM	H310464
	1	Seal kit	SWE 41, SWE42	VMQ	H310465
		Pos. 4, 6, 8, 9 and 10 available as complete seal kit only			
		If seat seal (pos.4) in VMQ - than housing seal (pos. 6) in HNBR			
	1	Seal kit	SW43, SW44, SW47, SW48	EPDM	H175842
	1	Seal kit	SW43, SW44, SW47, SW48	HNBR	H175848
	1	Seal kit	SW43, SW44, SW47, SW48	FPM	H203383
	1	Seal kit	SW43, SW44, SW47, SW48	VMQ	H310471
		Pos. 4, 6, 8, 9 and 10 available as complete seal kit only			
		If seat seal (pos.4) in VMQ - than housing seal (pos. 6) in HNBR			
	1	Seal kit	SWE45, SWE46, SWE47,SWE48	EPDM	H203757
	1	Seal kit	SWE45, SWE46, SWE47,SWE48	HNBR	H321851
	1	Seal kit	SWE45, SWE46, SWE47,SWE48	FPM	H327506
	1	Seal kit	SWE45, SWE46, SWE47,SWE48	VMQ	

Information contained in this document is subject to change without notice and does not represent a commitment on the part of SPX FLOW, Inc.. No part of this document may be reproduced or transmitted in any form or by any means, electronic or mechanical, including photocopying and recording, for any

Spare parts list:

Single Seat Valve SW41, SW42, SWE43, SWE44, SWE41, SWE42
Change Over Valve SW43, SW44, SW47, SW48, SWE45, SWE46, SWE47, SWE48
Device Category 2G for ATEX Zone 1
3"

Date:	24.07.23			
Name:	Shreshth			
Approved by:	Peters			
Date:				
Name:				
Approved by:				

SPX FLOW

RN ATEX 054.805-1

Item	Quantity	Description		Material	Part no.
1	1	Housing	SW41	1.4404	H168781
1	1	Housing	SW42	1.4404	H172438
1	1	Housing	SWE43	1.4404	H172808
1	1	Housing	SWE44	1.4404	H172814
1	1	Housing upper part	SWE41	1.4404	H168787
2	1	Housing lower part		1.4404	H172715
1	1	Housing upper part	SWE42	1.4404	H172480
2	1	Housing lower part		1.4404	H172715
1	1	Housing upper part	SW43	1.4404	H168787
2	1	Housing		1.4404	H168781
1	1	Housing upper part	SW44	1.4404	H172480
2	1	Housing		1.4404	H168781
1	1	Housing upper part	SW47	1.4404	H168787
2	1	Housing		1.4404	H172438
1	1	Housing upper part	SW48	1.4404	H168787
2	1	Housing		1.4404	H172438
1	1	Housing upper part	SWE45	1.4404	H168787
2	1	Housing upper part		1.4404	H168787
3	1	Housing lower part		1.4404	H172715
1	1	Housing upper part	SWE46	1.4404	H172480
2	1	Housing upper part		1.4404	H168787
3	1	Housing lower part		1.4404	H172715
1	1	Housing upper part	SWE47	1.4404	H168787
2	1	Housing upper part		1.4404	H172480
3	1	Housing lower part		1.4404	H172715
1	1	Housing upper part	SWE48	1.4404	H168787
2	1	Housing upper part		1.4404	H168787
3	1	Housing lower part		1.4404	H311369

Item	Quantity	Description		Material	Part no.
4	1	Seat seal	SW41, SW42 SWE41, SWE42, SWE43, SWE44	EPDM	H77561
				HNBR	H166679
				FPM	H77560
				VMQ	H77559
	2	Seat seal	SW43, SW44, SW47, SW48 SWE45, SWE46, SWE47, SWE48	EPDM	H77561
				HNBR	H166679
				FPM	H77560
				VMQ	H77559
5	1	Valve shaft	SW41, SW42 SWE41, SWE42, SWE43, SWE44	1.4404	H170339
	1	Valve shaft	SW43, SW44, SW47, SW48 SWE45, SWE46, SWE47, SWE48	1.4404	H170576
6	1	Housing seal	SW41, SW42 SWE41, SWE42, SWE43, SWE44	EPDM	H170669
				HNBR	H170656
				FPM	H170670
				VMQ	
	2	Housing seal	SW43, SW44, SW47, SW48	EPDM	H170669
				HNBR	H170656
				FPM	H170670
				VMQ	
	3	Housing seal	SWE45, SWE46, SWE47, SWE48	EPDM	H170669
				HNBR	H170656
				FPM	H170670
				VMQ	
7	1	Clamp	SW41, SW42 SWE41, SWE42, SWE43, SWE44	1.4301	H126267
	2	Clamp	SW43, SW44, SW47, SW48	1.4301	H126267
	3	Clamp	SWE45, SWE46, SWE47, SWE48	1.4301	H126267
8	1	Shaft seal		Turcon MF6	H323082

Information contained in this document is subject to change without notice and does not represent a commitment on the part of SPX FLOW, Inc.. No part of this document may be reproduced or transmitted in any form or by any means, electronic or mechanical, including photocopying and recording, for any

Spare parts list:

Single Seat Valve SW41, SW42, SWE43, SWE44, SWE41, SWE42
Change Over Valve SW43, SW44, SW47, SW48, SWE45, SWE46, SWE47, SWE48
Device Category 2G for ATEX Zone 1
3"

Date:	24.07.23			
Name:	Shreshth			
Approved by:	Peters			
Date:				
Name:				
Approved by:				

SPX FLOW

RN ATEX 054.805-1

Item	Quantity	Description		Material	Part no.
9	1	Seat seal		EPDM	H77442
				HNBR	H170176
				FPM	H77441
				VMQ	H77440
10	1	Bushing		PTFE + 25% carbon	H207154
11	1	Yoke		1.4404	H171389
12	4	Hex. screw M8x20	DIN EN 24017-A2-70	1.4301	H78776
13	1	Actuator	Ø165		H171380
14	1	Guide rod		1.4305	H171063
15	1	Centering nut		1.4301	H170196
16	1	Hex. Nut	DIN EN ISO 10511-M12-A2	A2-70	H79298
17	4	Hex. screw M8x16	DIN EN 24017-A2-70	A2-70	H78772
18	1	O-ring		NBR	H173930
19	1	Opereating cam		1.4523	H173087
20	1	Proximity switch holder housing SW4		VESTAMID	H173931
21	1	ATEX CU-S adapter complete		1.4301	H332570
22	1	IECEX CU ex ia 1 S&T 24V		1.4301	H337798

Item	Quantity	Description		Material	Part no.
		Pos. 12,13 und 17 available as complete seal kit only			
		If seat seal (pos.17) in VMQ - than housing seal (pos. 13) in HNBR			
	1	Seal kit	SW 41, 42, SWE 43, 44	EPDM	H175818
	1	Seal kit	SW 41, 42, SWE 43, 44	HNBR	H175820
	1	Seal kit	SW 41, 42, SWE 43, 44	FPM	H310453
	1	Seal kit	SW 41, 42, SWE 43, 44	VMQ	H201994
		Pos. 4, 6, 8, 9 and 10 available as complete seal kit only			
		If seat seal (pos.4) in VMQ - than housing seal (pos. 6) in HNBR			
	1	Seal kit	SWE 41, SWE42	EPDM	H175835
	1	Seal kit	SWE 41, SWE42	HNBR	H175837
	1	Seal kit	SWE 41, SWE42	FPM	H310462
	1	Seal kit	SWE 41, SWE42	VMQ	H310463
		Pos. 4, 6, 8, 9 and 10 available as complete seal kit only			
		If seat seal (pos.4) in VMQ - than housing seal (pos. 6) in HNBR			
	1	Seal kit	SW43, SW44, SW47, SW48	EPDM	H175851
	1	Seal kit	SW43, SW44, SW47, SW48	HNBR	H175853
	1	Seal kit	SW43, SW44, SW47, SW48	FPM	H310469
	1	Seal kit	SW43, SW44, SW47, SW48	VMQ	H310471
		Pos. 4, 6, 8, 9 and 10 available as complete seal kit only			
		If seat seal (pos.4) in VMQ - than housing seal (pos. 6) in HNBR			
	1	Seal kit	SWE45, SWE46, SWE47,SWE48	EPDM	H203761
	1	Seal kit	SWE45, SWE46, SWE47,SWE48	HNBR	H325407
	1	Seal kit	SWE45, SWE46, SWE47,SWE48	FPM	H325408
	1	Seal kit	SWE45, SWE46, SWE47,SWE48	VMQ	

Information contained in this document is subject to change without notice and does not represent a commitment on the part of SPX FLOW, Inc.. No part of this document may be reproduced or transmitted in any form or by any means, electronic or mechanical, including photocopying and recording, for any

Spare parts list:

Single Seat Valve SW41, SW42, SWE43, SWE44, SWE41, SWE42
Change Over Valve SW43, SW44, SW47, SW48, SWE45, SWE46, SWE47, SWE48
Device Category 2G for ATEX Zone 1
DN100

Date:	24.07.23			
Name:	Shreshth			
Approved by:	Peters			
Date:				
Name:				
Approved by:				

SPX FLOW

RN ATEX 054.805-1

Item	Quantity	Description		Material	Part no.
1	1	Housing	SW41	1.4404	H161864
1	1	Housing	SW42	1.4404	H172433
1	1	Housing	SWE43	1.4404	H169954
1	1	Housing	SWE44	1.4404	H173727
1	1	Housing upper part	SWE41	1.4404	H168660
2	1	Housing lower part		1.4404	H172690
1	1	Housing upper part	SWE42	1.4404	H172471
2	1	Housing lower part		1.4404	H172690
1	1	Housing upper part	SW43	1.4404	H168660
2	1	Housing		1.4404	H161864
1	1	Housing upper part	SW44	1.4404	H172471
2	1	Housing		1.4404	H161864
1	1	Housing upper part	SW47	1.4404	H168660
2	1	Housing		1.4404	H172433
1	1	Housing upper part	SW48	1.4404	H172471
2	1	Housing		1.4404	H172433
1	1	Housing upper part	SWE45	1.4404	H168660
2	1	Housing upper part		1.4404	H168660
3	1	Housing lower part		1.4404	H172690
1	1	Housing upper part	SWE46	1.4404	H172471
2	1	Housing upper part		1.4404	H168660
3	1	Housing lower part		1.4404	H172690
1	1	Housing upper part	SWE47	1.4404	H168660
2	1	Housing upper part		1.4404	H172471
3	1	Housing lower part		1.4404	H172690
1	1	Housing upper part	SWE48	1.4404	H168660
2	1	Housing upper part		1.4404	H168660
3	1	Housing lower part		1.4404	H311366

Item	Quantity	Description		Material	Part no.
4	1	Seat seal	SW41, SW42 SWE41, SWE42, SWE43, SWE44	EPDM	H77586
				HNBR	H166682
				FPM	H77785
				VMQ	H77584
	2	Seat seal	SW43, SW44, SW47, SW48 SWE45, SWE46, SWE47, SWE48	EPDM	H77586
				HNBR	H166682
				FPM	H77785
				VMQ	H77584
5	1	Valve shaft	SW41, SW42 SWE41, SWE42, SWE43, SWE44	1.4404	H170334
	1	Valve shaft	SW43, SW44, SW47, SW48 SWE45, SWE46, SWE47, SWE48	1.4404	H170571
6	1	Housing seal	SW41, SW42 SWE41, SWE42, SWE43, SWE44	EPDM	H170671
				HNBR	H170657
				FPM	H170672
				VMQ	
	2	Housing seal	SW43, SW44, SW47, SW48	EPDM	H170671
				HNBR	H170657
				FPM	H170672
				VMQ	
	3	Housing seal	SWE45, SWE46, SWE47, SWE48	EPDM	H170671
				HNBR	H170657
				FPM	H170672
				VMQ	
7	1	Clamp	SW41, SW42 SWE41, SWE42, SWE43, SWE44	1.4301	H126268
	2	Clamp	SW43, SW44, SW47, SW48	1.4301	H126268
	3	Clamp	SWE45, SWE46, SWE47, SWE48	1.4301	H126268
8	1	Shaft seal		Turcon MF6	H323082

Information contained in this document is subject to change without notice and does not represent a commitment on the part of SPX FLOW, Inc.. No part of this document may be reproduced or transmitted in any form or by any means, electronic or mechanical, including photocopying and recording, for any

Spare parts list:

Single Seat Valve SW41, SW42, SWE43, SWE44, SWE41, SWE42
Change Over Valve SW43, SW44, SW47, SW48, SWE45, SWE46, SWE47, SWE48
Device Category 2G for ATEX Zone 1
DN100

Date:	24.07.23			
Name:	Shreshth			
Approved by:	Peters			
Date:				
Name:				
Approved by:				

SPX FLOW

RN ATEX 054.805-1

Item	Quantity	Description		Material	Part no.
9	1	Seat seal		EPDM	H77442
				HNBR	H170176
				FPM	H77441
				VMQ	H77440
10	1	Bushing		PTFE + 25% carbon	H207154
11	1	Yoke		1.4404	H171387
12	4	Hex. screw M8x20	DIN EN 24017-A2-70	1.4301	H78776
13	1	Actuator	Ø165		H171380
14	1	Guide rod		1.4305	H171063
15	1	Centering nut		1.4301	H170196
16	1	Hex. Nut	DIN EN ISO 10511-M12-A2	A2-70	H79298
17	4	Hex. screw M8x16	DIN EN 24017-A2-70	A2-70	H78772
18	1	O-ring		NBR	H173930
19	1	Opereating cam		1.4523	H173087
20	1	Proximity switch holder housing SW4		VESTAMID	H173931
21	1	ATEX CU-S adapter complete		1.4301	H332570
22	1	IECEX CU ex ia 1 S&T 24V		1.4301	H337798

Item	Quantity	Description		Material	Part no.
		Pos. 12,13 und 17 available as complete seal kit only			
		If seat seal (pos.17) in VMQ - than housing seal (pos. 13) in HNBR			
	1	Seal kit	SW 41, 42, SWE 43, 44	EPDM	H175810
	1	Seal kit	SW 41, 42, SWE 43, 44	HNBR	H175816
	1	Seal kit	SW 41, 42, SWE 43, 44	FPM	H204908
	1	Seal kit	SW 41, 42, SWE 43, 44	VMQ	H310454
		Pos. 4, 6, 8, 9 and 10 available as complete seal kit only			
		If seat seal (pos.4) in VMQ - than housing seal (pos. 6) in HNBR			
	1	Seal kit	SWE 41, SWE42	EPDM	H175827
	1	Seal kit	SWE 41, SWE42	HNBR	H175833
	1	Seal kit	SWE 41, SWE42	FPM	H310466
	1	Seal kit	SWE 41, SWE42	VMQ	H310467
		Pos. 4, 6, 8, 9 and 10 available as complete seal kit only			
		If seat seal (pos.4) in VMQ - than housing seal (pos. 6) in HNBR			
	1	Seal kit	SW43, SW44, SW47, SW48	EPDM	H175843
	1	Seal kit	SW43, SW44, SW47, SW48	HNBR	H175849
	1	Seal kit	SW43, SW44, SW47, SW48	FPM	H207422
	1	Seal kit	SW43, SW44, SW47, SW48	VMQ	H310472
		Pos. 4, 6, 8, 9 and 10 available as complete seal kit only			
		If seat seal (pos.4) in VMQ - than housing seal (pos. 6) in HNBR			
	1	Seal kit	SWE45, SWE46, SWE47,SWE48	EPDM	H203758
	1	Seal kit	SWE45, SWE46, SWE47,SWE48	HNBR	H325242
	1	Seal kit	SWE45, SWE46, SWE47,SWE48	FPM	H327507
	1	Seal kit	SWE45, SWE46, SWE47,SWE48	VMQ	

Information contained in this document is subject to change without notice and does not represent a commitment on the part of SPX FLOW, Inc.. No part of this document may be reproduced or transmitted in any form or by any means, electronic or mechanical, including photocopying and recording, for any

Spare parts list:

Single Seat Valve SW41, SW42, SWE43, SWE44, SWE41, SWE42
Change Over Valve SW43, SW44, SW47, SW48, SWE45, SWE46, SWE47, SWE48
Device Category 2G for ATEX Zone 1
4"

Date:	24.07.23			
Name:	Shreshth			
Approved by:	Peters			
Date:				
Name:				
Approved by:				

SPX FLOW

RN ATEX 054.805-1

Item	Quantity	Description		Material	Part no.
1	1	Housing	SW41	1.4404	H168804
1	1	Housing	SW42	1.4404	H172439
1	1	Housing	SWE43	1.4404	H172809
1	1	Housing	SWE44	1.4404	H172815
1	1	Housing upper part	SWE41	1.4404	H168809
2	1	Housing lower part		1.4404	H172716
1	1	Housing upper part	SWE42	1.4404	H172481
2	1	Housing lower part		1.4404	H172716
1	1	Housing upper part	SW43	1.4404	H168809
2	1	Housing		1.4404	H168804
1	1	Housing upper part	SW44	1.4404	H172481
2	1	Housing		1.4404	H168804
1	1	Housing upper part	SW47	1.4404	H168809
2	1	Housing		1.4404	H172439
1	1	Housing upper part	SW48	1.4404	H172481
2	1	Housing		1.4404	H172439
1	1	Housing upper part	SWE45	1.4404	H168809
2	1	Housing upper part		1.4404	H168809
3	1	Housing lower part		1.4404	H172716
1	1	Housing upper part	SWE46	1.4404	H172481
2	1	Housing upper part		1.4404	H168809
3	1	Housing lower part		1.4404	H172716
1	1	Housing upper part	SWE47	1.4404	H168809
2	1	Housing upper part		1.4404	H172481
3	1	Housing lower part		1.4404	H172716
1	1	Housing upper part	SWE48	1.4404	H168809
2	1	Housing upper part		1.4404	H168809
3	1	Housing lower part		1.4404	H311370

Item	Quantity	Description		Material	Part no.
4	1	Seat seal	SW41, SW42 SWE41, SWE42, SWE43, SWE44	EPDM	H77586
				HNBR	H166682
				FPM	H77785
				VMQ	H77584
	2	Seat seal	SW43, SW44, SW47, SW48 SWE45, SWE46, SWE47, SWE48	EPDM	H77586
				HNBR	H166682
				FPM	H77785
				VMQ	H77584
5	1	Valve shaft	SW41, SW42 SWE41, SWE42, SWE43, SWE44	1.4404	H170340
	1	Valve shaft	SW43, SW44, SW47, SW48 SWE45, SWE46, SWE47, SWE48	1.4404	H170577
6	1	Housing seal	SW41, SW42 SWE41, SWE42, SWE43, SWE44	EPDM	H170671
				HNBR	H170657
				FPM	H170672
				VMQ	
	2	Housing seal	SW43, SW44, SW47, SW48	EPDM	H170671
				HNBR	H170657
				FPM	H170672
				VMQ	
	3	Housing seal	SWE45, SWE46, SWE47, SWE48	EPDM	H170671
				HNBR	H170657
				FPM	H170672
				VMQ	
7	1	Clamp	SW41, SW42 SWE41, SWE42, SWE43, SWE44	1.4301	H126268
	2	Clamp	SW43, SW44, SW47, SW48	1.4301	H126268
	3	Clamp	SWE45, SWE46, SWE47, SWE48	1.4301	H126268
8	1	Shaft seal		Turcon MF6	H323082

Information contained in this document is subject to change without notice and does not represent a commitment on the part of SPX FLOW, Inc.. No part of this document may be reproduced or transmitted in any form or by any means, electronic or mechanical, including photocopying and recording, for any

Spare parts list:

Single Seat Valve SW41, SW42, SWE43, SWE44, SWE41, SWE42
Change Over Valve SW43, SW44, SW47, SW48, SWE45, SWE46, SWE47, SWE48
Device Category 2G for ATEX Zone 1
4"

Date:	24.07.23			
Name:	Shreshth			
Approved by:	Peters			
Date:				
Name:				
Approved by:				

SPX FLOW

RN ATEX 054.805-1

Item	Quantity	Description		Material	Part no.
9	1	Seat seal		EPDM	H77442
				HNBR	H170176
				FPM	H77441
				VMQ	H77440
10	1	Bushing		PTFE + 25% carbon	H207154
11	1	Yoke		1.4404	H171387
12	4	Hex. screw M8x20	DIN EN 24017-A2-70	1.4301	H78776
13	1	Actuator	Ø165		H171380
14	1	Guide rod		1.4305	H171063
15	1	Centering nut		1.4301	H170196
16	1	Hex. Nut	DIN EN ISO 10511-M12-A2	A2-70	H79298
17	4	Hex. screw M8x16	DIN EN 24017-A2-70	A2-70	H78772
18	1	O-ring		NBR	H173930
19	1	Opereating cam		1.4523	H173087
20	1	Proximity switch holder housing SW4		VESTAMID	H173931
21	1	ATEX CU-S adapter complete		1.4301	H332570
22	1	IECEX CU ex ia 1 S&T 24V		1.4301	H337798

Item	Quantity	Description		Material	Part no.
		Pos. 12,13 und 17 available as complete seal kit only			
		If seat seal (pos.17) in VMQ - than housing seal (pos. 13) in HNBR			
	1	Seal kit	SW 41, 42, SWE 43, 44	EPDM	H175810
	1	Seal kit	SW 41, 42, SWE 43, 44	HNBR	H175816
	1	Seal kit	SW 41, 42, SWE 43, 44	FPM	H204908
	1	Seal kit	SW 41, 42, SWE 43, 44	VMQ	H310454
		Pos. 4, 6, 8, 9 and 10 available as complete seal kit only			
		If seat seal (pos.4) in VMQ - than housing seal (pos. 6) in HNBR			
	1	Seal kit	SWE 41, SWE42	EPDM	H175827
	1	Seal kit	SWE 41, SWE42	HNBR	H175833
	1	Seal kit	SWE 41, SWE42	FPM	H310466
	1	Seal kit	SWE 41, SWE42	VMQ	H310467
		Pos. 4, 6, 8, 9 and 10 available as complete seal kit only			
		If seat seal (pos.4) in VMQ - than housing seal (pos. 6) in HNBR			
	1	Seal kit	SW43, SW44, SW47, SW48	EPDM	H175843
	1	Seal kit	SW43, SW44, SW47, SW48	HNBR	H175849
	1	Seal kit	SW43, SW44, SW47, SW48	FPM	H207422
	1	Seal kit	SW43, SW44, SW47, SW48	VMQ	H310472
		Pos. 4, 6, 8, 9 and 10 available as complete seal kit only			
		If seat seal (pos.4) in VMQ - than housing seal (pos. 6) in HNBR			
	1	Seal kit	SWE45, SWE46, SWE47,SWE48	EPDM	H203758
	1	Seal kit	SWE45, SWE46, SWE47,SWE48	HNBR	H325242
	1	Seal kit	SWE45, SWE46, SWE47,SWE48	FPM	H327507
	1	Seal kit	SWE45, SWE46, SWE47,SWE48	VMQ	

Information contained in this document is subject to change without notice and does not represent a commitment on the part of SPX FLOW, Inc.. No part of this document may be reproduced or transmitted in any form or by any means, electronic or mechanical, including photocopying and recording, for any

Spare parts list:

Single Seat Valve SW41, SW42, SWE43, SWE44, SWE41, SWE42
Device Category 3G for ATEX Zone 2
DN 25 - DN100; 1" - 4"

Date:	19.07.23				**SPX FLOW**
Name:	Shreshth				
Approved by:	Peters				
Date:					Page 1 of 27
Name:					**RN ATEX 054.805-2**
Approved by:					

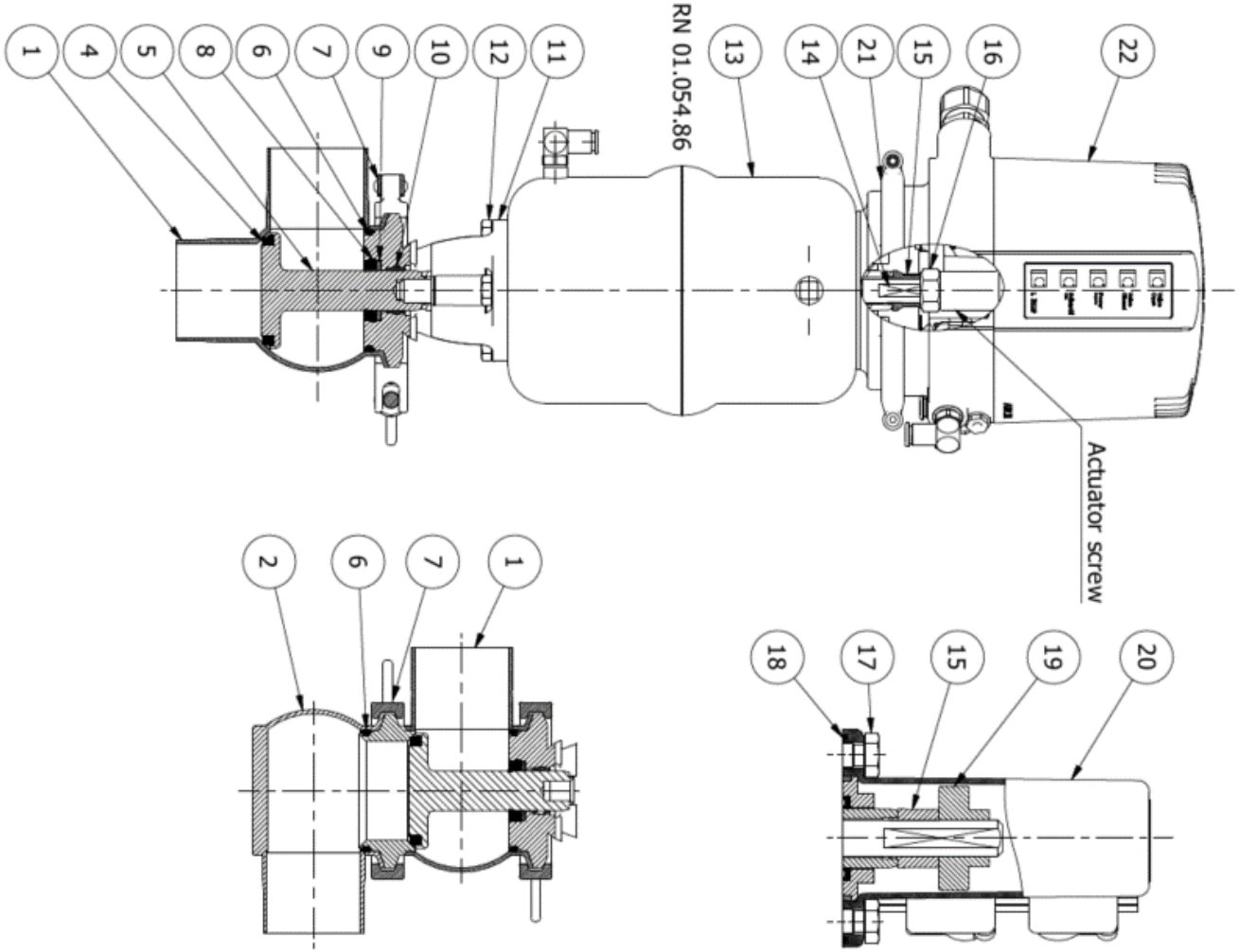

Information contained in this document is subject to change without notice and does not represent a commitment on the part of SPX FLOW, Inc.. No part of this document may be reproduced or transmitted in any form or by any means, electronic or mechanical, including photocopying and recording, for any

Spare parts list:

Change Over Valve SW43, SW44, SW47, SW48, SWE45, SWE46, SWE47, SWE48
Device Category 3G for ATEX Zone 2
DN 25 - DN100; 1" - 4"

Date:	09/12	19.07.23		
Name:	RAP	Shreshth		
Approved by:		Peters		
Date:				
Name:				
Approved by:				

SPX FLOW

RN ATEX 054.805-2

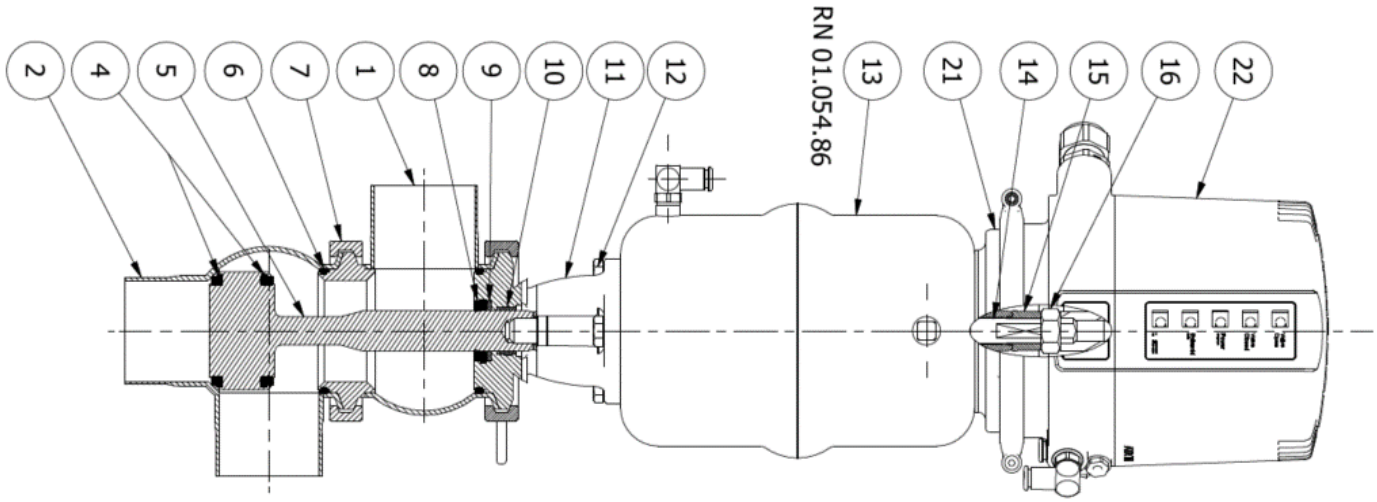

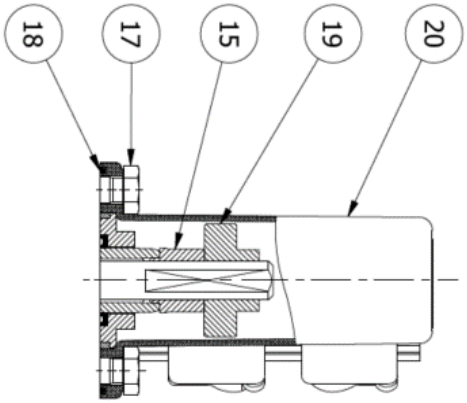

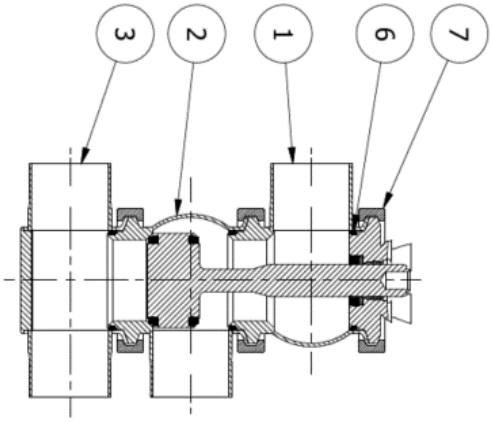

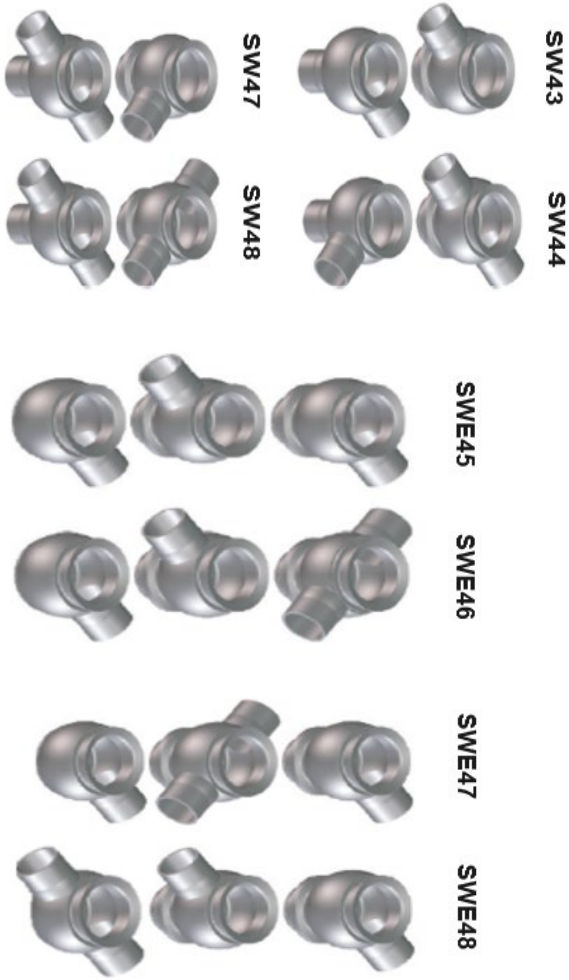

Information contained in this document is subject to change without notice and does not represent a commitment on the part of SPX FLOW, Inc.. No part of this document may be reproduced or transmitted in any form or by any means, electronic or mechanical, including photocopying and recording, for any

Spare parts list:

Single Seat Valve SW41, SW42, SWE43, SWE44, SWE41, SWE42
Change Over Valve SW43, SW44, SW47, SW48, SWE45, SWE46, SWE47, SWE48
Device Category 3G for ATEX Zone 2

DN 25

Date:	19.07.23			
Name:	Shreshth			
Approved by:	Peters			
Date:				
Name:				
Approved by:				

SPX FLOW

RN ATEX 054.805-2

Item	Quantity	Description		Material	Part no.
1	1	Housing	SW41	1.4404	H168561
1	1	Housing	SW42	1.4404	H172428
1	1	Housing	SWE43	1.4404	H169949
1	1	Housing	SWE44	1.4404	H172645
1	1	Housing upper part	SWE41	1.4404	H168564
2	1	Housing lower part		1.4404	H172763
1	1	Housing upper part	SWE42	1.4404	H172466
2	1	Housing lower part		1.4404	H172763
1	1	Housing upper part	SW43	1.4404	H168564
2	1	Housing		1.4404	H168561
1	1	Housing upper part	SW44	1.4404	H172466
2	1	Housing		1.4404	H168561
1	1	Housing upper part	SW47	1.4404	H168564
2	1	Housing		1.4404	H172428
1	1	Housing upper part	SW48	1.4404	H172466
2	1	Housing		1.4404	H172428
1	1	Housing upper part	SWE45	1.4404	H168564
2	1	Housing upper part		1.4404	H168564
3	1	Housing lower part		1.4404	H172763
1	1	Housing upper part	SWE46	1.4404	H172466
2	1	Housing upper part		1.4404	H168564
3	1	Housing lower part		1.4404	H172763
1	1	Housing upper part	SWE47	1.4404	H168564
2	1	Housing upper part		1.4404	H172466
3	1	Housing lower part		1.4404	H172763
1	1	Housing upper part	SWE48	1.4404	H168564
2	1	Housing upper part		1.4404	H168564
3	1	Housing lower part		1.4404	H311363

Item	Quantity	Description		Material	Part no.
4	1	Seat seal	SW41, SW42 SWE41, SWE42, SWE43, SWE44	EPDM	H77442
				HNBR	H170176
				FPM	H77441
				VMQ	H77440
	2	Seat seal	SW43, SW44, SW47, SW48 SWE45, SWE46, SWE47, SWE48	EPDM	H77442
				HNBR	H170176
				FPM	H77441
				VMQ	H77440
5	1	Valve shaft	SW41, SW42 SWE41, SWE42, SWE43, SWE44	1.4404	H170329
	1	Valve shaft	SW43, SW44, SW47, SW48 SWE45, SWE46, SWE47, SWE48	1.4404	H170566
6	1	Housing seal	SW41, SW42 SWE41, SWE42, SWE43, SWE44	EPDM	H136432
				HNBR	H172124
				FPM	H136431
				VMQ	
	2	Housing seal	SW43, SW44, SW47, SW48	EPDM	H136432
				HNBR	H172124
				FPM	H136431
				VMQ	
	3	Housing seal	SWE45, SWE46, SWE47, SWE48	EPDM	H136432
				HNBR	H172124
				FPM	H136431
				VMQ	
7	1	Clamp	SW41, SW42 SWE41, SWE42, SWE43, SWE44	1.4301	H126263
	2	Clamp	SW43, SW44, SW47, SW48	1.4301	H126263
	3	Clamp	SWE45, SWE46, SWE47, SWE48	1.4301	H126263
8	1	Shaft seal		Turcon MF6	H323082

Information contained in this document is subject to change without notice and does not represent a commitment on the part of SPX FLOW, Inc.. No part of this document may be reproduced or transmitted in any form or by any means, electronic or mechanical, including photocopying and recording, for any

Spare parts list:

Single Seat Valve SW41, SW42, SWE43, SWE44, SWE41, SWE42
Change Over Valve SW43, SW44, SW47, SW48, SWE45, SWE46, SWE47, SWE48
Device Category 3G for ATEX Zone 2

DN 25

Date:	19.07.23			
Name:	Shreshth			
Approved by:	Peters			
Date:				
Name:				
Approved by:				

SPX FLOW

RN ATEX 054.805-2

Item	Quantity	Description		Material	Part no.
9	1	Seat seal		EPDM	H77442
				HNBR	H170176
				FPM	H77441
				VMQ	H77440
10	1	Bushing		PTFE + 25% carbon	H207154
11	1	Yoke		1.4404	H171382
12	4	Hex. screw M8x16	DIN EN 24017-A2-70	A2-70	H78772
13	1	Actuator	Ø74		H171378
14	1	Guide rod		1.4305	H171061
15	1	Centering nut		1.4301	H170196
16	1	Hex. Nut	DIN EN ISO 10511-M12-A2	A2-70	H79298
17	4	Hex. screw M8x16	DIN EN 24017-A2-70	A2-70	H78772
18	1	O-ring		NBR	H173930
19	1	Opereating cam		1.4523	H173086
20	1	Proximity switch holder housing SW4		VESTAMID	H173931
21	1	CU4-T-Adapter, CU4plus-T-Adapter		PA6.6 GF30	see page 27
22	1	CU4, CU4plus		PA6.6 GF30	see page 27

Item	Quantity	Description		Material	Part no.
		Pos. 4, 6, 8, 9 and 10 available as complete seal kit only			
		If seat seal (pos.4) in VMQ - than housing seal (pos. 6) in HNBR			
	1	Seal kit	SW41, SW42 - SWE 43, SWE44	EPDM	H175805
	1	Seal kit	SW41, SW42 - SWE 43, SWE44	HNBR	H175811
	1	Seal kit	SW41, SW42 - SWE 43, SWE44	FPM	H310446
	1	Seal kit	SW41, SW42 - SWE 43, SWE44	VMQ	H310447
		Pos. 4, 6, 8, 9 and 10 available as complete seal kit only			
		If seat seal (pos.4) in VMQ - than housing seal (pos. 6) in HNBR			
	1	Seal kit	SWE 41, SWE42	EPDM	H175821
	1	Seal kit	SWE 41, SWE42	HNBR	H175828
	1	Seal kit	SWE 41, SWE42	FPM	H310455
	1	Seal kit	SWE 41, SWE42	VMQ	H310456
		Pos. 4, 6, 8, 9 and 10 available as complete seal kit only			
		If seat seal (pos.4) in VMQ - than housing seal (pos. 6) in HNBR			
	1	Seal kit	SW43, SW44, SW47, SW48	EPDM	H175838
	1	Seal kit	SW43, SW44, SW47, SW48	HNBR	H175844
	1	Seal kit	SW43, SW44, SW47, SW48	FPM	H205969
	1	Seal kit	SW43, SW44, SW47, SW48	VMQ	H201995
		Pos. 4, 6, 8, 9 and 10 available as complete seal kit only			
		If seat seal (pos.4) in VMQ - than housing seal (pos. 6) in HNBR			
	1	Seal kit	SWE45, SWE46, SWE47,SWE48	EPDM	H203753
	1	Seal kit	SWE45, SWE46, SWE47,SWE48	HNBR	H325420
	1	Seal kit	SWE45, SWE46, SWE47,SWE48	FPM	H325421
	1	Seal kit	SWE45, SWE46, SWE47,SWE48	VMQ	

Information contained in this document is subject to change without notice and does not represent a commitment on the part of SPX FLOW, Inc.. No part of this document may be reproduced or transmitted in any form or by any means, electronic or mechanical, including photocopying and recording, for any

Spare parts list:

Single Seat Valve SW41, SW42, SWE43, SWE44, SWE41, SWE42
Change Over Valve SW43, SW44, SW47, SW48, SWE45, SWE46, SWE47, SWE48
Device Category 3G for ATEX Zone 2
1"

Date:	19.07.23			
Name:	Shreshth			
Approved by:	Peters			
Date:				
Name:				
Approved by:				

SPX FLOW

RN ATEX 054.805-2

Item	Quantity	Description		Material	Part no.
1	1	Housing	SW41	1.4404	H168373
1	1	Housing	SW42	1.4404	H172434
1	1	Housing	SWE43	1.4404	H172804
1	1	Housing	SWE44	1.4404	H172810
1	1	Housing upper part	SWE41	1.4404	H168678
2	1	Housing lower part		1.4404	H172711
1	1	Housing upper part	SWE42	1.4404	H172476
2	1	Housing lower part		1.4404	H172711
1	1	Housing upper part	SW43	1.4404	H168678
2	1	Housing		1.4404	H168673
1	1	Housing upper part	SW44	1.4404	H172476
2	1	Housing		1.4404	H168673
1	1	Housing upper part	SW47	1.4404	H168678
2	1	Housing		1.4404	H172434
1	1	Housing upper part	SW48	1.4404	H172476
2	1	Housing		1.4404	H172434
1	1	Housing upper part	SWE45	1.4404	H168678
2	1	Housing upper part		1.4404	H168678
3	1	Housing lower part		1.4404	H172711
1	1	Housing upper part	SWE46	1.4404	H172476
2	1	Housing upper part		1.4404	H168678
3	1	Housing lower part		1.4404	H172711
1	1	Housing upper part	SWE47	1.4404	H168678
2	1	Housing upper part		1.4404	H172476
3	1	Housing lower part		1.4404	H172711
1	1	Housing upper part	SWE48	1.4404	H168678
2	1	Housing upper part		1.4404	H168678
3	1	Housing lower part		1.4404	H311367

Item	Quantity	Description		Material	Part no.
4	1	Seat seal	SW41, SW42 SWE41, SWE42, SWE43, SWE44	EPDM	H77442
				HNBR	H170176
				FPM	H77441
				VMQ	H77440
	2	Seat seal	SW43, SW44, SW47, SW48 SWE45, SWE46, SWE47, SWE48	EPDM	H77442
				HNBR	H170176
				FPM	H77441
				VMQ	H77440
5	1	Valve shaft	SW41, SW42 SWE41, SWE42, SWE43, SWE44	1.4404	H170335
	1	Valve shaft	SW43, SW44, SW47, SW48 SWE45, SWE46, SWE47, SWE48	1.4404	H170572
6	1	Housing seal	SW41, SW42 SWE41, SWE42, SWE43, SWE44	EPDM	H136432
				HNBR	H172124
				FPM	H136431
				VMQ	
	2	Housing seal	SW43, SW44, SW47, SW48	EPDM	H136432
				HNBR	H172124
				FPM	H136431
				VMQ	
	3	Housing seal	SWE45, SWE46, SWE47, SWE48	EPDM	H136432
				HNBR	H172124
				FPM	H136431
				VMQ	
7	1	Clamp	SW41, SW42 SWE41, SWE42, SWE43, SWE44	1.4301	H126263
	2	Clamp	SW43, SW44, SW47, SW48	1.4301	H126263
	3	Clamp	SWE45, SWE46, SWE47, SWE48	1.4301	H126263
8	1	Shaft seal		Turcon MF6	H323082

Information contained in this document is subject to change without notice and does not represent a commitment on the part of SPX FLOW, Inc.. No part of this document may be reproduced or transmitted in any form or by any means, electronic or mechanical, including photocopying and recording, for any

Spare parts list:

Single Seat Valve SW41, SW42, SWE43, SWE44, SWE41, SWE42
Change Over Valve SW43, SW44, SW47, SW48, SWE45, SWE46, SWE47, SWE48
Device Category 3G for ATEX Zone 2
1"

Date:	19.07.23			
Name:	Shreshth			
Approved by:	Peters			
Date:				
Name:				
Approved by:				

SPX FLOW

RN ATEX 054.805-2

Item	Quantity	Description		Material	Part no.
9	1	Seat seal		EPDM	H77442
				HNBR	H170176
				FPM	H77441
				VMQ	H77440
10	1	Bushing		PTFE + 25% carbon	H207154
11	1	Yoke		1.4404	H171382
12	4	Hex. screw M8x16	DIN EN 24017-A2-70	1.4301	H78772
13	1	Actuator	Ø74		H171378
14	1	Guide rod		1.4305	H171061
15	1	Centering nut		1.4301	H170196
16	1	Hex. Nut	DIN EN ISO 10511-M12-A2	A2-70	H79298
17	4	Hex. screw M8x16	DIN EN 24017-A2-70	A2-70	H78772
18	1	O-ring		NBR	H173930
19	1	Opereating cam		1.4523	H173086
20	1	Proximity switch holder housing SW4		VESTAMID	H173931
21	1	CU4-T-Adapter, CU4plus-T-Adapter		PA6.6 GF30	see page 27
22	1	CU4, CU4plus		PA6.6 GF30	see page 27

Item	Quantity	Description		Material	Part no.
		Pos. 4, 6, 8, 9 and 10 available as complete seal kit only			
		If seat seal (pos.4) in VMQ - than housing seal (pos. 6) in HNBR			
	1	Seal kit	SW41, SW42 - SWE 43, SWE44	EPDM	H175805
	1	Seal kit	SW41, SW42 - SWE 43, SWE44	HNBR	H175811
	1	Seal kit	SW41, SW42 - SWE 43, SWE44	FPM	H310446
	1	Seal kit	SW41, SW42 - SWE 43, SWE44	VMQ	H310447
		Pos. 4, 6, 8, 9 and 10 available as complete seal kit only			
		If seat seal (pos.4) in VMQ - than housing seal (pos. 6) in HNBR			
	1	Seal kit	SWE 41, SWE42	EPDM	H175821
	1	Seal kit	SWE 41, SWE42	HNBR	H175828
	1	Seal kit	SWE 41, SWE42	FPM	H310455
	1	Seal kit	SWE 41, SWE42	VMQ	H310456
		Pos. 4, 6, 8, 9 and 10 available as complete seal kit only			
		If seat seal (pos.4) in VMQ - than housing seal (pos. 6) in HNBR			
	1	Seal kit	SW43, SW44, SW47, SW48	EPDM	H175838
	1	Seal kit	SW43, SW44, SW47, SW48	HNBR	H175844
	1	Seal kit	SW43, SW44, SW47, SW48	FPM	H205969
	1	Seal kit	SW43, SW44, SW47, SW48	VMQ	H201995
		Pos. 4, 6, 8, 9 and 10 available as complete seal kit only			
		If seat seal (pos.4) in VMQ - than housing seal (pos. 6) in HNBR			
	1	Seal kit	SWE45, SWE46, SWE47,SWE48	EPDM	H203753
	1	Seal kit	SWE45, SWE46, SWE47,SWE48	HNBR	H325420
	1	Seal kit	SWE45, SWE46, SWE47,SWE48	FPM	H325421
	1	Seal kit	SWE45, SWE46, SWE47,SWE48	VMQ	

Information contained in this document is subject to change without notice and does not represent a commitment on the part of SPX FLOW, Inc.. No part of this document may be reproduced or transmitted in any form or by any means, electronic or mechanical, including photocopying and recording, for any

Spare parts list:

Single Seat Valve SW41, SW42, SWE43, SWE44, SWE41, SWE42
Change Over Valve SW43, SW44, SW47, SW48, SWE45, SWE46, SWE47, SWE48
Device Category 3G for ATEX Zone 2
DN40

Date:	19.07.23			
Name:	Shreshth			
Approved by:	Peters			
Date:				
Name:				
Approved by:				

SPX FLOW

RN ATEX 054.805-2

Item	Quantity	Description		Material	Part no.
1	1	Housing	SW41	1.4404	H171391
1	1	Housing	SW42	1.4404	H172429
1	1	Housing	SWE43	1.4404	H169950
1	1	Housing	SWE44	1.4404	H172646
1	1	Housing upper part	SWE41	1.4404	H171395
2	1	Housing lower part		1.4404	H172765
1	1	Housing upper part	SWE42	1.4404	H172467
2	1	Housing lower part		1.4404	H172765
1	1	Housing upper part	SW43	1.4404	H171395
2	1	Housing		1.4404	H171391
1	1	Housing upper part	SW44	1.4404	H172467
2	1	Housing		1.4404	H171391
1	1	Housing upper part	SW47	1.4404	H171395
2	1	Housing		1.4404	H172429
1	1	Housing upper part	SW48	1.4404	H172467
2	1	Housing		1.4404	H172429
1	1	Housing upper part	SWE45	1.4404	H171395
2	1	Housing upper part		1.4404	H171395
3	1	Housing lower part		1.4404	H172765
1	1	Housing upper part	SWE46	1.4404	H172467
2	1	Housing upper part		1.4404	H171395
3	1	Housing lower part		1.4404	H172765
1	1	Housing upper part	SWE47	1.4404	H171395
2	1	Housing upper part		1.4404	H172467
3	1	Housing lower part		1.4404	H172765
1	1	Housing upper part	SWE48	1.4404	H171395
2	1	Housing upper part		1.4404	H171395
3	1	Housing lower part		1.4404	H311364

Item	Quantity	Description		Material	Part no.
4	1	Seat seal	SW41, SW42 SWE41, SWE42, SWE43, SWE44	EPDM	H77442
				HNBR	H170176
				FPM	H77441
				VMQ	H77440
	2	Seat seal	SW43, SW44, SW47, SW48 SWE45, SWE46, SWE47, SWE48	EPDM	H77467
				HNBR	H166676
				FPM	H77466
				VMQ	H77465
5	1	Valve shaft	SW41, SW42 SWE41, SWE42, SWE43, SWE44	1.4404	H170330
	1	Valve shaft	SW43, SW44, SW47, SW48 SWE45, SWE46, SWE47, SWE48	1.4404	H170567
6	1	Housing seal	SW41, SW42 SWE41, SWE42, SWE43, SWE44	EPDM	H77439
				HNBR	H170017
				FPM	H77438
				VMQ	
	2	Housing seal	SW43, SW44, SW47, SW48	EPDM	H77439
				HNBR	H170017
				FPM	H77438
				VMQ	
	3	Housing seal	SWE45, SWE46, SWE47, SWE48	EPDM	H77439
				HNBR	H170017
				FPM	H77438
				VMQ	
7	1	Clamp	SW41, SW42 SWE41, SWE42, SWE43, SWE44	1.4301	H126264
	2	Clamp	SW43, SW44, SW47, SW48	1.4301	H126264
	3	Clamp	SWE45, SWE46, SWE47, SWE48	1.4301	H126264
8	1	Shaft seal		Turcon MF6	H323082

Information contained in this document is subject to change without notice and does not represent a commitment on the part of SPX FLOW, Inc.. No part of this document may be reproduced or transmitted in any form or by any means, electronic or mechanical, including photocopying and recording, for any

Spare parts list:

Single Seat Valve SW41, SW42, SWE43, SWE44, SWE41, SWE42
Change Over Valve SW43, SW44, SW47, SW48, SWE45, SWE46, SWE47, SWE48
Device Category 3G for ATEX Zone 2

DN40

Date:	19.07.23			
Name:	Shreshth			
Approved by:	Peters			
Date:				
Name:				
Approved by:				

SPX FLOW

RN ATEX 054.805-2

Item	Quantity	Description		Material	Part no.
9	1	Seat seal		EPDM	H77442
				HNBR	H170176
				FPM	H77441
				VMQ	H77440
10	1	Bushing		PTFE + 25% carbon	H207154
11	1	Yoke		1.4404	H171383
12	4	Hex. screw M8x16	DIN EN 24017-A2-70	1.4301	H78772
13	1	Actuator	Ø74		H171378
14	1	Guide rod		1.4305	H171061
15	1	Centering nut		1.4301	H170196
16	1	Hex. Nut	DIN EN ISO 10511-M12-A2	A2-70	H79298
17	4	Hex. screw M8x16	DIN EN 24017-A2-70	A2-70	H78772
18	1	O-ring		NBR	H173930
19	1	Opereating cam		1.4523	H173087
20	1	Proximity switch holder housing SW4		VESTAMID	H173931
21	1	CU4-T-Adapter, CU4plus-T-Adapter		PA6.6 GF30	see page 27
22	1	CU4, CU4plus		PA6.6 GF30	see page 27

Item	Quantity	Description		Material	Part no.
		Pos. 4, 6, 8, 9 and 10 available as complete seal kit only			
		If seat seal (pos.4) in VMQ - than housing seal (pos. 6) in HNBR			
	1	Seal kit	SW41, SW42 - SWE 43, SWE44	EPDM	H175806
	1	Seal kit	SW41, SW42 - SWE 43, SWE44	HNBR	H175812
	1	Seal kit	SW41, SW42 - SWE 43, SWE44	FPM	H310448
	1	Seal kit	SW41, SW42 - SWE 43, SWE44	VMQ	H310449
		Pos. 4, 6, 8, 9 and 10 available as complete seal kit only			
		If seat seal (pos.4) in VMQ - than housing seal (pos. 6) in HNBR			
	1	Seal kit	SWE 41, SWE42	EPDM	H175822
	1	Seal kit	SWE 41, SWE42	HNBR	H175829
	1	Seal kit	SWE 41, SWE42	FPM	H310457
	1	Seal kit	SWE 41, SWE42	VMQ	H310458
		Pos. 4, 6, 8, 9 and 10 available as complete seal kit only			
		If seat seal (pos.4) in VMQ - than housing seal (pos. 6) in HNBR			
	1	Seal kit	SW43, SW44, SW47, SW48	EPDM	H175839
	1	Seal kit	SW43, SW44, SW47, SW48	HNBR	H175845
	1	Seal kit	SW43, SW44, SW47, SW48	FPM	H208217
	1	Seal kit	SW43, SW44, SW47, SW48	VMQ	H310468
		Pos. 4, 6, 8, 9 and 10 available as complete seal kit only			
		If seat seal (pos.4) in VMQ - than housing seal (pos. 6) in HNBR			
	1	Seal kit	SWE45, SWE46, SWE47,SWE48	EPDM	H203754
	1	Seal kit	SWE45, SWE46, SWE47,SWE48	HNBR	H325406
	1	Seal kit	SWE45, SWE46, SWE47,SWE48	FPM	H325405
	1	Seal kit	SWE45, SWE46, SWE47,SWE48	VMQ	

Information contained in this document is subject to change without notice and does not represent a commitment on the part of SPX FLOW, Inc.. No part of this document may be reproduced or transmitted in any form or by any means, electronic or mechanical, including photocopying and recording, for any

Spare parts list:

Single Seat Valve SW41, SW42, SWE43, SWE44, SWE41, SWE42
Change Over Valve SW43, SW44, SW47, SW48, SWE45, SWE46, SWE47, SWE48
Device Category 3G for ATEX Zone 2
1,5"

Date:	19.07.23			
Name:	Shreshth			
Approved by:	Peters			
Date:				
Name:				
Approved by:				

SPX FLOW

RN ATEX 054.805-2

Item	Quantity	Description		Material	Part no.
1	1	Housing	SW41	1.4404	H171404
1	1	Housing	SW42	1.4404	H172435
1	1	Housing	SWE43	1.4404	H172805
1	1	Housing	SWE44	1.4404	H172811
1	1	Housing upper part	SWE41	1.4404	H171400
2	1	Housing lower part		1.4404	H172712
1	1	Housing upper part	SWE42	1.4404	H172477
2	1	Housing lower part		1.4404	H172712
1	1	Housing upper part	SW43	1.4404	H171400
2	1	Housing		1.4404	H171404
1	1	Housing upper part	SW44	1.4404	H172477
2	1	Housing		1.4404	H171404
1	1	Housing upper part	SW47	1.4404	H171400
2	1	Housing		1.4404	H172435
1	1	Housing upper part	SW48	1.4404	H172477
2	1	Housing		1.4404	H172435
1	1	Housing upper part	SWE45	1.4404	H171400
2	1	Housing upper part		1.4404	H171400
3	1	Housing lower part		1.4404	H172712
1	1	Housing upper part	SWE46	1.4404	H172477
2	1	Housing upper part		1.4404	H171400
3	1	Housing lower part		1.4404	H172712
1	1	Housing upper part	SWE47	1.4404	H171400
2	1	Housing upper part		1.4404	H172477
3	1	Housing lower part		1.4404	H172712
1	1	Housing upper part	SWE48	1.4404	H171400
2	1	Housing upper part		1.4404	H171400
3	1	Housing lower part		1.4404	H202852

Item	Quantity	Description		Material	Part no.
4	1	Seat seal	SW41, SW42 SWE41, SWE42, SWE43, SWE44	EPDM	H77442
				HNBR	H170176
				FPM	H77441
				VMQ	H77440
	2	Seat seal	SW43, SW44, SW47, SW48 SWE45, SWE46, SWE47, SWE48	EPDM	H77467
				HNBR	H166676
				FPM	H77466
				VMQ	H77465
5	1	Valve shaft	SW41, SW42 SWE41, SWE42, SWE43, SWE44	1.4404	H170336
	1	Valve shaft	SW43, SW44, SW47, SW48 SWE45, SWE46, SWE47, SWE48	1.4404	H170573
6	1	Housing seal	SW41, SW42 SWE41, SWE42, SWE43, SWE44	EPDM	H77439
				HNBR	H170017
				FPM	H77438
				VMQ	
	2	Housing seal	SW43, SW44, SW47, SW48	EPDM	H77439
				HNBR	H170017
				FPM	H77438
				VMQ	
	3	Housing seal	SWE45, SWE46, SWE47, SWE48	EPDM	H77439
				HNBR	H170017
				FPM	H77438
				VMQ	
7	1	Clamp	SW41, SW42 SWE41, SWE42, SWE43, SWE44	1.4301	H126264
	2	Clamp	SW43, SW44, SW47, SW48	1.4301	H126264
	3	Clamp	SWE45, SWE46, SWE47, SWE48	1.4301	H126264
8	1	Shaft seal		Turcon MF6	H323082

Information contained in this document is subject to change without notice and does not represent a commitment on the part of SPX FLOW, Inc.. No part of this document may be reproduced or transmitted in any form or by any means, electronic or mechanical, including photocopying and recording, for any

Spare parts list:

Single Seat Valve SW41, SW42, SWE43, SWE44, SWE41, SWE42
Change Over Valve SW43, SW44, SW47, SW48, SWE45, SWE46, SWE47, SWE48
Device Category 3G for ATEX Zone 2
1,5"

Date:	19.07.23			
Name:	Shreshth			
Approved by:	Peters			
Date:				
Name:				
Approved by:				

SPX FLOW

RN ATEX 054.805-2

Item	Quantity	Description		Material	Part no.
9	1	Seat seal		EPDM	H77442
				HNBR	H170176
				FPM	H77441
				VMQ	H77440
10	1	Bushing		PTFE + 25% carbon	H207154
11	1	Yoke		1.4404	H171383
12	4	Hex. screw M8x16	DIN EN 24017-A2-70	1.4301	H78772
13	1	Actuator	Ø74		H171378
14	1	Guide rod		1.4305	H171061
15	1	Centering nut		1.4301	H170196
16	1	Hex. Nut	DIN EN ISO 10511-M12-A2	A2-70	H79298
17	4	Hex. screw M8x16	DIN EN 24017-A2-70	A2-70	H78772
18	1	O-ring		NBR	H173930
19	1	Opereating cam		1.4523	H173087
20	1	Proximity switch holder housing SW4		VESTAMID	H173931
21	1	CU4-T-Adapter, CU4plus-T-Adapter		PA6.6 GF30	see page 27
22	1	CU4, CU4plus		PA6.6 GF30	see page 27

Item	Quantity	Description		Material	Part no.
		Pos. 12,13 und 17 available as complete seal kit only			
		If seat seal (pos.17) in VMQ - than housing seal (pos. 13) in HNBR			
	1	Seal kit	SW 41, 42, SWE 43, 44	EPDM	H175806
	1	Seal kit	SW 41, 42, SWE 43, 44	HNBR	H175812
	1	Seal kit	SW 41, 42, SWE 43, 44	FPM	H310448
	1	Seal kit	SW 41, 42, SWE 43, 44	VMQ	H310449
		Pos. 4, 6, 8, 9 and 10 available as complete seal kit only			
		If seat seal (pos.4) in VMQ - than housing seal (pos. 6) in HNBR			
	1	Seal kit	SWE 41, SWE42	EPDM	H175822
	1	Seal kit	SWE 41, SWE42	HNBR	H175829
	1	Seal kit	SWE 41, SWE42	FPM	H310457
	1	Seal kit	SWE 41, SWE42	VMQ	H310458
		Pos. 4, 6, 8, 9 and 10 available as complete seal kit only			
		If seat seal (pos.4) in VMQ - than housing seal (pos. 6) in HNBR			
	1	Seal kit	SW43, SW44, SW47, SW48	EPDM	H175839
	1	Seal kit	SW43, SW44, SW47, SW48	HNBR	H175845
	1	Seal kit	SW43, SW44, SW47, SW48	FPM	H208217
	1	Seal kit	SW43, SW44, SW47, SW48	VMQ	H310468
		Pos. 4, 6, 8, 9 and 10 available as complete seal kit only			
		If seat seal (pos.4) in VMQ - than housing seal (pos. 6) in HNBR			
	1	Seal kit	SWE45, SWE46, SWE47,SWE48	EPDM	H203754
	1	Seal kit	SWE45, SWE46, SWE47,SWE48	HNBR	H325406
	1	Seal kit	SWE45, SWE46, SWE47,SWE48	FPM	H325405
	1	Seal kit	SWE45, SWE46, SWE47,SWE48	VMQ	

Information contained in this document is subject to change without notice and does not represent a commitment on the part of SPX FLOW, Inc.. No part of this document may be reproduced or transmitted in any form or by any means, electronic or mechanical, including photocopying and recording, for any

Spare parts list:

Single Seat Valve SW41, SW42, SWE43, SWE44, SWE41, SWE42
Change Over Valve SW43, SW44, SW47, SW48, SWE45, SWE46, SWE47, SWE48
Device Category 3G for ATEX Zone 2
DN50

Date:	19.07.23				**SPX FLOW**
Name:	Shreshth				
Approved by:	Peters				
Date:					Page 11 of 27
Name:					**RN ATEX 054.805-2**
Approved by:					

Item	Quantity	Description		Material	Part no.
1	1	Housing	SW41	1.4404	H168596
1	1	Housing	SW42	1.4404	H172430
1	1	Housing	SWE43	1.4404	H169951
1	1	Housing	SWE44	1.4404	H172647
1	1	Housing upper part	SWE41	1.4404	H168601
2	1	Housing lower part		1.4404	H172687
1	1	Housing upper part	SWE42	1.4404	H172468
2	1	Housing lower part		1.4404	H172687
1	1	Housing upper part	SW43	1.4404	H168601
2	1	Housing		1.4404	H168596
1	1	Housing upper part	SW44	1.4404	H172468
2	1	Housing		1.4404	H168596
1	1	Housing upper part	SW47	1.4404	H168601
2	1	Housing		1.4404	H172430
1	1	Housing upper part	SW48	1.4404	H172468
2	1	Housing		1.4404	H172430
1	1	Housing upper part	SWE45	1.4404	H168601
2	1	Housing upper part		1.4404	H168601
3	1	Housing lower part		1.4404	H172687
1	1	Housing upper part	SWE46	1.4404	H172468
2	1	Housing upper part		1.4404	H168601
3	1	Housing lower part		1.4404	H172687
1	1	Housing upper part	SWE47	1.4404	H168601
2	1	Housing upper part		1.4404	H172468
3	1	Housing lower part		1.4404	H172687
1	1	Housing upper part	SWE48	1.4404	H168601
2	1	Housing upper part		1.4404	H168601
3	1	Housing lower part		1.4404	H311365

Item	Quantity	Description		Material	Part no.
4	1	Seat seal	SW41, SW42 SWE41, SWE42, SWE43, SWE44	EPDM	H77491
				HNBR	H166085
				FPM	H77490
				VMQ	H77489
	2	Seat seal	SW43, SW44, SW47, SW48 SWE45, SWE46, SWE47, SWE48	EPDM	H77491
				HNBR	H166085
				FPM	H77490
				VMQ	H77489
5	1	Valve shaft	SW41, SW42 SWE41, SWE42, SWE43, SWE44	1.4404	H170331
	1	Valve shaft	SW43, SW44, SW47, SW48 SWE45, SWE46, SWE47, SWE48	1.4404	H170568
6	1	Housing seal	SW41, SW42 SWE41, SWE42, SWE43, SWE44	EPDM	H170665
				HNBR	H170654
				FPM	H170666
				VMQ	
	2	Housing seal	SW43, SW44, SW47, SW48	EPDM	H170665
				HNBR	H170654
				FPM	H170666
				VMQ	
	3	Housing seal	SWE45, SWE46, SWE47, SWE48	EPDM	H170665
				HNBR	H170654
				FPM	H170666
				VMQ	
7	1	Clamp	SW41, SW42 SWE41, SWE42, SWE43, SWE44	1.4301	H126265
	2	Clamp	SW43, SW44, SW47, SW48	1.4301	H126265
	3	Clamp	SWE45, SWE46, SWE47, SWE48	1.4301	H126265
8	1	Shaft seal		Turcon MF6	H323082

Information contained in this document is subject to change without notice and does not represent a commitment on the part of SPX FLOW, Inc.. No part of this document may be reproduced or transmitted in any form or by any means, electronic or mechanical, including photocopying and recording, for any

Spare parts list:

Single Seat Valve SW41, SW42, SWE43, SWE44, SWE41, SWE42
Change Over Valve SW43, SW44, SW47, SW48, SWE45, SWE46, SWE47, SWE48
Device Category 3G for ATEX Zone 2
DN50

Date:	19.07.23			
Name:	Shreshth			
Approved by:	Peters			
Date:				
Name:				
Approved by:				

SPX FLOW

RN ATEX 054.805-2

Item	Quantity	Description		Material	Part no.
9	1	Seat seal		EPDM	H77442
				HNBR	H170176
				FPM	H77441
				VMQ	H77440
10	1	Bushing		PTFE + 25% carbon	H207154
11	1	Yoke		1.4404	H171384
12	4	Hex. screw M8x16	DIN EN 24017-A2-70	1.4301	H78772
13	1	Actuator	Ø110		H171379
14	1	Guide rod		1.4305	H171062
15	1	Centering nut		1.4301	H170196
16	1	Hex. Nut	DIN EN ISO 10511-M12-A2	A2-70	H79298
17	4	Hex. screw M8x16	DIN EN 24017-A2-70	A2-70	H78772
18	1	O-ring		NBR	H173930
19	1	Opereating cam		1.4523	H173087
20	1	Proximity switch holder housing SW4		VESTAMID	H173931
21	1	CU4-T-Adapter, CU4plus-T-Adapter		PA6.6 GF30	see page 27
22	1	CU4, CU4plus		PA6.6 GF30	see page 27

Item	Quantity	Description		Material	Part no.
		Pos. 12,13 und 17 available as complete seal kit only			
		If seat seal (pos.17) in VMQ - than housing seal (pos. 13) in HNBR			
	1	Seal kit	SW 41, 42, SWE 43, 44	EPDM	H175807
	1	Seal kit	SW 41, 42, SWE 43, 44	HNBR	H175813
	1	Seal kit	SW 41, 42, SWE 43, 44	FPM	H203385
	1	Seal kit	SW 41, 42, SWE 43, 44	VMQ	H201991
		Pos. 4, 6, 8, 9 and 10 available as complete seal kit only			
		If seat seal (pos.4) in VMQ - than housing seal (pos. 6) in HNBR			
	1	Seal kit	SWE 41, SWE42	EPDM	H175824
	1	Seal kit	SWE 41, SWE42	HNBR	H175830
	1	Seal kit	SWE 41, SWE42	FPM	H310459
	1	Seal kit	SWE 41, SWE42	VMQ	H205952
		Pos. 4, 6, 8, 9 and 10 available as complete seal kit only			
		If seat seal (pos.4) in VMQ - than housing seal (pos. 6) in HNBR			
	1	Seal kit	SW43, SW44, SW47, SW48	EPDM	H175840
	1	Seal kit	SW43, SW44, SW47, SW48	HNBR	H175846
	1	Seal kit	SW43, SW44, SW47, SW48	FPM	H205908
	1	Seal kit	SW43, SW44, SW47, SW48	VMQ	H177396
		Pos. 4, 6, 8, 9 and 10 available as complete seal kit only			
		If seat seal (pos.4) in VMQ - than housing seal (pos. 6) in HNBR			
	1	Seal kit	SWE45, SWE46, SWE47,SWE48	EPDM	H203755
	1	Seal kit	SWE45, SWE46, SWE47,SWE48	HNBR	H325411
	1	Seal kit	SWE45, SWE46, SWE47,SWE48	FPM	H325412
	1	Seal kit	SWE45, SWE46, SWE47,SWE48	VMQ	

Information contained in this document is subject to change without notice and does not represent a commitment on the part of SPX FLOW, Inc.. No part of this document may be reproduced or transmitted in any form or by any means, electronic or mechanical, including photocopying and recording, for any

Spare parts list:

Single Seat Valve SW41, SW42, SWE43, SWE44, SWE41, SWE42
Change Over Valve SW43, SW44, SW47, SW48, SWE45, SWE46, SWE47, SWE48
Device Category 3G for ATEX Zone 2
2"

Date:	19.07.23			
Name:	Shreshth			
Approved by:	Peters			
Date:				
Name:				
Approved by:				

SPX FLOW

RN ATEX 054.805-2

Item	Quantity	Description		Material	Part no.
1	1	Housing	SW41	1.4404	H168747
1	1	Housing	SW42	1.4404	H172436
1	1	Housing	SWE43	1.4404	H172806
1	1	Housing	SWE44	1.4404	H172812
1	1	Housing upper part	SWE41	1.4404	H168753
2	1	Housing lower part		1.4404	H172713
1	1	Housing upper part	SWE42	1.4404	H172478
2	1	Housing lower part		1.4404	H172713
1	1	Housing upper part	SW43	1.4404	H168753
2	1	Housing		1.4404	H168747
1	1	Housing upper part	SW44	1.4404	H172478
2	1	Housing		1.4404	H168747
1	1	Housing upper part	SW47	1.4404	H168753
2	1	Housing		1.4404	H172436
1	1	Housing upper part	SW48	1.4404	H172478
2	1	Housing		1.4404	H172436
1	1	Housing upper part	SWE45	1.4404	H168753
2	1	Housing upper part		1.4404	H168753
3	1	Housing lower part		1.4404	H172713
1	1	Housing upper part	SWE46	1.4404	H172478
2	1	Housing upper part		1.4404	H168753
3	1	Housing lower part		1.4404	H172713
1	1	Housing upper part	SWE47	1.4404	H168753
2	1	Housing upper part		1.4404	H172478
3	1	Housing lower part		1.4404	H172713
1	1	Housing upper part	SWE48	1.4404	H168753
2	1	Housing upper part		1.4404	H168753
3	1	Housing lower part		1.4404	H311368

Item	Quantity	Description		Material	Part no.
4	1	Seat seal	SW41, SW42 SWE41, SWE42, SWE43, SWE44	EPDM	H77491
				HNBR	H166085
				FPM	H77490
				VMQ	H77489
	2	Seat seal	SW43, SW44, SW47, SW48 SWE45, SWE46, SWE47, SWE48	EPDM	H77491
				HNBR	H166085
				FPM	H77490
				VMQ	H77489
5	1	Valve shaft	SW41, SW42 SWE41, SWE42, SWE43, SWE44	1.4404	H170337
	1	Valve shaft	SW43, SW44, SW47, SW48 SWE45, SWE46, SWE47, SWE48	1.4404	H170574
6	1	Housing seal	SW41, SW42 SWE41, SWE42, SWE43, SWE44	EPDM	H170665
				HNBR	H170654
				FPM	H170666
				VMQ	
	2	Housing seal	SW43, SW44, SW47, SW48	EPDM	H170665
				HNBR	H170654
				FPM	H170666
				VMQ	
	3	Housing seal	SWE45, SWE46, SWE47, SWE48	EPDM	H170665
				HNBR	H170654
				FPM	H170666
				VMQ	
7	1	Clamp	SW41, SW42 SWE41, SWE42, SWE43, SWE44	1.4301	H126265
	2	Clamp	SW43, SW44, SW47, SW48	1.4301	H126265
	3	Clamp	SWE45, SWE46, SWE47, SWE48	1.4301	H126265
8	1	Shaft seal		Turcon MF6	H323082

Information contained in this document is subject to change without notice and does not represent a commitment on the part of SPX FLOW, Inc.. No part of this document may be reproduced or transmitted in any form or by any means, electronic or mechanical, including photocopying and recording, for any

Spare parts list:

Single Seat Valve SW41, SW42, SWE43, SWE44, SWE41, SWE42
Change Over Valve SW43, SW44, SW47, SW48, SWE45, SWE46, SWE47, SWE48
Device Category 3G for ATEX Zone 2
2"

Date:	19.07.23			
Name:	Shreshth			
Approved by:	Peters			
Date:				
Name:				
Approved by:				

SPX FLOW

RN ATEX 054.805-2

Item	Quantity	Description		Material	Part no.
9	1	Seat seal		EPDM	H77442
				HNBR	H170176
				FPM	H77441
				VMQ	H77440
10	1	Bushing		PTFE + 25% carbon	H207154
11	1	Yoke		1.4404	H171384
12	4	Hex. screw M8x16	DIN EN 24017-A2-70	1.4301	H78772
13	1	Actuator	Ø110		H171379
14	1	Guide rod		1.4305	H171062
15	1	Centering nut		1.4301	H170196
16	1	Hex. Nut	DIN EN ISO 10511-M12-A2	A2-70	H79298
17	4	Hex. screw M8x16	DIN EN 24017-A2-70	A2-70	H78772
18	1	O-ring		NBR	H173930
19	1	Opereating cam		1.4523	H173087
20	1	Proximity switch holder housing SW4		VESTAMID	H173931
21	1	CU4-T-Adapter, CU4plus-T-Adapter		PA6.6 GF30	see page 27
22	1	CU4, CU4plus		PA6.6 GF30	see page 27

Item	Quantity	Description		Material	Part no.
		Pos. 12,13 und 17 available as complete seal kit only			
		If seat seal (pos.17) in VMQ - than housing seal (pos. 13) in HNBR			
	1	Seal kit	SW 41, 42, SWE 43, 44	EPDM	H175807
	1	Seal kit	SW 41, 42, SWE 43, 44	HNBR	H175813
	1	Seal kit	SW 41, 42, SWE 43, 44	FPM	H203385
	1	Seal kit	SW 41, 42, SWE 43, 44	VMQ	H201991
		Pos. 4, 6, 8, 9 and 10 available as complete seal kit only			
		If seat seal (pos.4) in VMQ - than housing seal (pos. 6) in HNBR			
	1	Seal kit	SWE 41, SWE42	EPDM	H175824
	1	Seal kit	SWE 41, SWE42	HNBR	H175830
	1	Seal kit	SWE 41, SWE42	FPM	H310459
	1	Seal kit	SWE 41, SWE42	VMQ	H205952
		Pos. 4, 6, 8, 9 and 10 available as complete seal kit only			
		If seat seal (pos.4) in VMQ - than housing seal (pos. 6) in HNBR			
	1	Seal kit	SW43, SW44, SW47, SW48	EPDM	H175840
	1	Seal kit	SW43, SW44, SW47, SW48	HNBR	H175846
	1	Seal kit	SW43, SW44, SW47, SW48	FPM	H205908
	1	Seal kit	SW43, SW44, SW47, SW48	VMQ	H177396
		Pos. 4, 6, 8, 9 and 10 available as complete seal kit only			
		If seat seal (pos.4) in VMQ - than housing seal (pos. 6) in HNBR			
	1	Seal kit	SWE45, SWE46, SWE47,SWE48	EPDM	H203755
	1	Seal kit	SWE45, SWE46, SWE47,SWE48	HNBR	H325411
	1	Seal kit	SWE45, SWE46, SWE47,SWE48	FPM	H325412
	1	Seal kit	SWE45, SWE46, SWE47,SWE48	VMQ	

Information contained in this document is subject to change without notice and does not represent a commitment on the part of SPX FLOW, Inc.. No part of this document may be reproduced or transmitted in any form or by any means, electronic or mechanical, including photocopying and recording, for any

Spare parts list:

Single Seat Valve SW41, SW42, SWE43, SWE44, SWE41, SWE42
Change Over Valve SW43, SW44, SW47, SW48, SWE45, SWE46, SWE47, SWE48
Device Category 3G for ATEX Zone 2
DN65

Date:	19.07.23			
Name:	Shreshth			
Approved by:	Peters			
Date:				
Name:				
Approved by:				

SPX FLOW

RN ATEX 054.805-2

Item	Quantity	Description		Material	Part no.
1	1	Housing	SW41	1.4404	H168644
1	1	Housing	SW42	1.4404	H172431
1	1	Housing	SWE43	1.4404	H169952
1	1	Housing	SWE44	1.4404	H172648
1	1	Housing upper part	SWE41	1.4404	H168649
2	1	Housing lower part		1.4404	H172688
1	1	Housing upper part	SWE42	1.4404	H172469
2	1	Housing lower part		1.4404	H172688
1	1	Housing upper part	SW43	1.4404	H168649
2	1	Housing		1.4404	H168644
1	1	Housing upper part	SW44	1.4404	H172469
2	1	Housing		1.4404	H168644
1	1	Housing upper part	SW47	1.4404	H168649
2	1	Housing		1.4404	H172431
1	1	Housing upper part	SW48	1.4404	H172469
2	1	Housing		1.4404	H172431
1	1	Housing upper part	SWE45	1.4404	H168649
2	1	Housing upper part		1.4404	H168649
3	1	Housing lower part		1.4404	H172688
1	1	Housing upper part	SWE46	1.4404	H172469
2	1	Housing upper part		1.4404	H168649
3	1	Housing lower part		1.4404	H172688
1	1	Housing upper part	SWE47	1.4404	H168649
2	1	Housing upper part		1.4404	H172469
3	1	Housing lower part		1.4404	H172688
1	1	Housing upper part	SWE48	1.4404	H168649
2	1	Housing upper part		1.4404	H168649
3	1	Housing lower part		1.4404	H201534

Item	Quantity	Description		Material	Part no.
4	1	Seat seal	SW41, SW42 SWE41, SWE42, SWE43, SWE44	EPDM	H77515
				HNBR	H166678
				FPM	H77514
				VMQ	H77513
	2	Seat seal	SW43, SW44, SW47, SW48 SWE45, SWE46, SWE47, SWE48	EPDM	H77515
				HNBR	H166678
				FPM	H77514
				VMQ	H77513
5	1	Valve shaft	SW41, SW42 SWE41, SWE42, SWE43, SWE44	1.4404	H170332
	1	Valve shaft	SW43, SW44, SW47, SW48 SWE45, SWE46, SWE47, SWE48	1.4404	H170569
6	1	Housing seal	SW41, SW42 SWE41, SWE42, SWE43, SWE44	EPDM	H77488
				HNBR	H168714
				FPM	H77487
				VMQ	
	2	Housing seal	SW43, SW44, SW47, SW48	EPDM	H77488
				HNBR	H168714
				FPM	H77487
				VMQ	
	3	Housing seal	SWE45, SWE46, SWE47, SWE48	EPDM	H77488
				HNBR	H168714
				FPM	H77487
				VMQ	
7	1	Clamp	SW41, SW42 SWE41, SWE42, SWE43, SWE44	1.4301	H126266
	2	Clamp	SW43, SW44, SW47, SW48	1.4301	H126266
	3	Clamp	SWE45, SWE46, SWE47, SWE48	1.4301	H126266
8	1	Shaft seal		Turcon MF6	H323082

Information contained in this document is subject to change without notice and does not represent a commitment on the part of SPX FLOW, Inc.. No part of this document may be reproduced or transmitted in any form or by any means, electronic or mechanical, including photocopying and recording, for any

Spare parts list:

Single Seat Valve SW41, SW42, SWE43, SWE44, SWE41, SWE42
Change Over Valve SW43, SW44, SW47, SW48, SWE45, SWE46, SWE47, SWE48
Device Category 3G for ATEX Zone 2

DN65

Date:	19.07.23			
Name:	Shreshth			
Approved by:	Peters			
Date:				
Name:				
Approved by:				

SPX FLOW

RN ATEX 054.805-2

Item	Quantity	Description		Material	Part no.
9	1	Seat seal		EPDM	H77442
				HNBR	H170176
				FPM	H77441
				VMQ	H77440
10	1	Bushing		PTFE + 25% carbon	H207154
11	1	Yoke		1.4404	H171385
12	4	Hex. screw M8x16	DIN EN 24017-A2-70	1.4301	H78772
13	1	Actuator	Ø110		H171379
14	1	Guide rod		1.4305	H171062
15	1	Centering nut		1.4301	H170196
16	1	Hex. Nut	DIN EN ISO 10511-M12-A2	A2-70	H79298
17	4	Hex. screw M8x16	DIN EN 24017-A2-70	A2-70	H78772
18	1	O-ring		NBR	H173930
19	1	Opereating cam		1.4523	H173087
20	1	Proximity switch holder housing SW4		VESTAMID	H173931
21	1	CU4-T-Adapter, CU4plus-T-Adapter		PA6.6 GF30	see page 27
22	1	CU4, CU4plus		PA6.6 GF30	see page 27

Item	Quantity	Description		Material	Part no.
		Pos. 12,13 und 17 available as complete seal kit only			
		If seat seal (pos.17) in VMQ - than housing seal (pos. 13) in HNBR			
	1	Seal kit	SW 41, 42, SWE 43, 44	EPDM	H175808
	1	Seal kit	SW 41, 42, SWE 43, 44	HNBR	H175814
	1	Seal kit	SW 41, 42, SWE 43, 44	FPM	H310450
	1	Seal kit	SW 41, 42, SWE 43, 44	VMQ	H202920
		Pos. 4, 6, 8, 9 and 10 available as complete seal kit only			
		If seat seal (pos.4) in VMQ - than housing seal (pos. 6) in HNBR			
	1	Seal kit	SWE 41, SWE42	EPDM	H175825
	1	Seal kit	SWE 41, SWE42	HNBR	H175831
	1	Seal kit	SWE 41, SWE42	FPM	H310461
	1	Seal kit	SWE 41, SWE42	VMQ	H204026
		Pos. 4, 6, 8, 9 and 10 available as complete seal kit only			
		If seat seal (pos.4) in VMQ - than housing seal (pos. 6) in HNBR			
	1	Seal kit	SW43, SW44, SW47, SW48	EPDM	H175841
	1	Seal kit	SW43, SW44, SW47, SW48	HNBR	H175847
	1	Seal kit	SW43, SW44, SW47, SW48	FPM	H203386
	1	Seal kit	SW43, SW44, SW47, SW48	VMQ	H177395
		Pos. 4, 6, 8, 9 and 10 available as complete seal kit only			
		If seat seal (pos.4) in VMQ - than housing seal (pos. 6) in HNBR			
	1	Seal kit	SWE45, SWE46, SWE47,SWE48	EPDM	H203756
	1	Seal kit	SWE45, SWE46, SWE47,SWE48	HNBR	H325423
	1	Seal kit	SWE45, SWE46, SWE47,SWE48	FPM	H325424
	1	Seal kit	SWE45, SWE46, SWE47,SWE48	VMQ	

Information contained in this document is subject to change without notice and does not represent a commitment on the part of SPX FLOW, Inc.. No part of this document may be reproduced or transmitted in any form or by any means, electronic or mechanical, including photocopying and recording, for any

Spare parts list:

Single Seat Valve SW41, SW42, SWE43, SWE44, SWE41, SWE42
Change Over Valve SW43, SW44, SW47, SW48, SWE45, SWE46, SWE47, SWE48
Device Category 3G for ATEX Zone 2
2,5"

Date:	19.07.23			
Name:	Shreshth			
Approved by:	Peters			
Date:				
Name:				
Approved by:				

SPX FLOW

RN ATEX 054.805-2

Item	Quantity	Description		Material	Part no.
1	1	Housing	SW41	1.4404	H168762
1	1	Housing	SW42	1.4404	H172437
1	1	Housing	SWE43	1.4404	H172807
1	1	Housing	SWE44	1.4404	H172813
1	1	Housing upper part	SWE41	1.4404	H168767
2	1	Housing lower part		1.4404	H172714
1	1	Housing upper part	SWE42	1.4404	H172479
2	1	Housing lower part		1.4404	H172714
1	1	Housing upper part	SW43	1.4404	H168767
2	1	Housing		1.4404	H168762
1	1	Housing upper part	SW44	1.4404	H172479
2	1	Housing		1.4404	H168762
1	1	Housing upper part	SW47	1.4404	H168767
2	1	Housing		1.4404	H172437
1	1	Housing upper part	SW48	1.4404	H172479
2	1	Housing		1.4404	H172437
1	1	Housing upper part	SWE45	1.4404	H168767
2	1	Housing upper part		1.4404	H168767
3	1	Housing lower part		1.4404	H172714
1	1	Housing upper part	SWE46	1.4404	H172479
2	1	Housing upper part		1.4404	H168767
3	1	Housing lower part		1.4404	H172714
1	1	Housing upper part	SWE47	1.4404	H168767
2	1	Housing upper part		1.4404	H172479
3	1	Housing lower part		1.4404	H172714
1	1	Housing upper part	SWE48	1.4404	H168767
2	1	Housing upper part		1.4404	H168767
3	1	Housing lower part		1.4404	H207429

Item	Quantity	Description		Material	Part no.
4	1	Seat seal	SW41, SW42 SWE41, SWE42, SWE43, SWE44	EPDM	H170662
				HNBR	H170658
				FPM	H170663
				VMQ	H170664
	2	Seat seal	SW43, SW44, SW47, SW48 SWE45, SWE46, SWE47, SWE48	EPDM	H170662
				HNBR	H170658
				FPM	H170663
				VMQ	H170664
5	1	Valve shaft	SW41, SW42 SWE41, SWE42, SWE43, SWE44	1.4404	H170338
	1	Valve shaft	SW43, SW44, SW47, SW48 SWE45, SWE46, SWE47, SWE48	1.4404	H170575
6	1	Housing seal	SW41, SW42 SWE41, SWE42, SWE43, SWE44	EPDM	H170667
				HNBR	H170655
				FPM	H170668
				VMQ	
	2	Housing seal	SW43, SW44, SW47, SW48	EPDM	H170667
				HNBR	H170655
				FPM	H170668
				VMQ	
	3	Housing seal	SWE45, SWE46, SWE47, SWE48	EPDM	H170667
				HNBR	H170655
				FPM	H170668
				VMQ	
7	1	Clamp	SW41, SW42 SWE41, SWE42, SWE43, SWE44	1.4301	H126266
	2	Clamp	SW43, SW44, SW47, SW48	1.4301	H126266
	3	Clamp	SWE45, SWE46, SWE47, SWE48	1.4301	H126266
8	1	Shaft seal		Turcon MF6	H323082

Information contained in this document is subject to change without notice and does not represent a commitment on the part of SPX FLOW, Inc.. No part of this document may be reproduced or transmitted in any form or by any means, electronic or mechanical, including photocopying and recording, for any

Spare parts list:

Single Seat Valve SW41, SW42, SWE43, SWE44, SWE41, SWE42
Change Over Valve SW43, SW44, SW47, SW48, SWE45, SWE46, SWE47, SWE48
Device Category 3G for ATEX Zone 2
2,5"

Date:	19.07.23			
Name:	Shreshth			
Approved by:	Peters			
Date:				
Name:				
Approved by:				

SPX FLOW

RN ATEX 054.805-2

Item	Quantity	Description		Material	Part no.
9	1	Seat seal		EPDM	H77442
				HNBR	H170176
				FPM	H77441
				VMQ	H77440
10	1	Bushing		PTFE + 25% carbon	H207154
11	1	Yoke		1.4404	H171385
12	4	Hex. screw M8x16	DIN EN 24017-A2-70	1.4301	H78772
13	1	Actuator	Ø110		H171379
14	1	Guide rod		1.4305	H171062
15	1	Centering nut		1.4301	H170196
16	1	Hex. Nut	DIN EN ISO 10511-M12-A2	A2-70	H79298
17	4	Hex. screw M8x16	DIN EN 24017-A2-70	A2-70	H78772
18	1	O-ring		NBR	H173930
19	1	Opereating cam		1.4523	H173087
20	1	Proximity switch holder housing SW4		VESTAMID	H173931
21	1	CU4-T-Adapter, CU4plus-T-Adapter		PA6.6 GF30	see page 27
22	1	CU4, CU4plus		PA6.6 GF30	see page 27

Item	Quantity	Description		Material	Part no.
		Pos. 12,13 und 17 available as complete seal kit only			
		If seat seal (pos.17) in VMQ - than housing seal (pos. 13) in HNBR			
	1	Seal kit	SW 41, 42, SWE 43, 44	EPDM	H175817
	1	Seal kit	SW 41, 42, SWE 43, 44	HNBR	H175819
	1	Seal kit	SW 41, 42, SWE 43, 44	FPM	H310451
	1	Seal kit	SW 41, 42, SWE 43, 44	VMQ	H201992
		Pos. 4, 6, 8, 9 and 10 available as complete seal kit only			
		If seat seal (pos.4) in VMQ - than housing seal (pos. 6) in HNBR			
	1	Seal kit	SWE 41, SWE42	EPDM	H175834
	1	Seal kit	SWE 41, SWE42	HNBR	H175836
	1	Seal kit	SWE 41, SWE42	FPM	H310460
	1	Seal kit	SWE 41, SWE42	VMQ	H205953
		Pos. 4, 6, 8, 9 and 10 available as complete seal kit only			
		If seat seal (pos.4) in VMQ - than housing seal (pos. 6) in HNBR			
	1	Seal kit	SW43, SW44, SW47, SW48	EPDM	H175850
	1	Seal kit	SW43, SW44, SW47, SW48	HNBR	H175852
	1	Seal kit	SW43, SW44, SW47, SW48	FPM	H205606
	1	Seal kit	SW43, SW44, SW47, SW48	VMQ	H201996
		Pos. 4, 6, 8, 9 and 10 available as complete seal kit only			
		If seat seal (pos.4) in VMQ - than housing seal (pos. 6) in HNBR			
	1	Seal kit	SWE45, SWE46, SWE47,SWE48	EPDM	H203760
	1	Seal kit	SWE45, SWE46, SWE47,SWE48	HNBR	H325409
	1	Seal kit	SWE45, SWE46, SWE47,SWE48	FPM	H325410
	1	Seal kit	SWE45, SWE46, SWE47,SWE48	VMQ	

Information contained in this document is subject to change without notice and does not represent a commitment on the part of SPX FLOW, Inc.. No part of this document may be reproduced or transmitted in any form or by any means, electronic or mechanical, including photocopying and recording, for any

Spare parts list:

Single Seat Valve SW41, SW42, SWE43, SWE44, SWE41, SWE42
Change Over Valve SW43, SW44, SW47, SW48, SWE45, SWE46, SWE47, SWE48
Device Category 3G for ATEX Zone 2
DN80

Date:	19.07.23			
Name:	Shreshth			
Approved by:	Peters			
Date:				
Name:				
Approved by:				

SPX FLOW

RN ATEX 054.805-2

Item	Quantity	Description		Material	Part no.
1	1	Housing	SW41	1.4404	H168630
1	1	Housing	SW42	1.4404	H172432
1	1	Housing	SWE43	1.4404	H169953
1	1	Housing	SWE44	1.4404	H173728
1	1	Housing upper part	SWE41	1.4404	H168638
2	1	Housing lower part		1.4404	H172689
1	1	Housing upper part	SWE42	1.4404	H172470
2	1	Housing lower part		1.4404	H172689
1	1	Housing upper part	SW43	1.4404	H168638
2	1	Housing		1.4404	H168630
1	1	Housing upper part	SW44	1.4404	H172470
2	1	Housing		1.4404	H168630
1	1	Housing upper part	SW47	1.4404	H168638
2	1	Housing		1.4404	H172432
1	1	Housing upper part	SW48	1.4404	H172470
2	1	Housing		1.4404	H172432
1	1	Housing upper part	SWE45	1.4404	H168638
2	1	Housing upper part		1.4404	H168638
3	1	Housing lower part		1.4404	H172689
1	1	Housing upper part	SWE46	1.4404	H172470
2	1	Housing upper part		1.4404	H168638
3	1	Housing lower part		1.4404	H172689
1	1	Housing upper part	SWE47	1.4404	H168638
2	1	Housing upper part		1.4404	H172470
3	1	Housing lower part		1.4404	H172689
1	1	Housing upper part	SWE48	1.4404	H168638
2	1	Housing upper part		1.4404	H168638
3	1	Housing lower part		1.4404	H202935

Item	Quantity	Description		Material	Part no.
4	1	Seat seal	SW41, SW42 SWE41, SWE42, SWE43, SWE44	EPDM	H77546
				HNBR	H166681
				FPM	H77545
				VMQ	H77544
	2	Seat seal	SW43, SW44, SW47, SW48 SWE45, SWE46, SWE47, SWE48	EPDM	H77546
				HNBR	H166681
				FPM	H77545
				VMQ	H77544
5	1	Valve shaft	SW41, SW42 SWE41, SWE42, SWE43, SWE44	1.4404	H170333
	1	Valve shaft	SW43, SW44, SW47, SW48 SWE45, SWE46, SWE47, SWE48	1.4404	H170570
6	1	Housing seal	SW41, SW42 SWE41, SWE42, SWE43, SWE44	EPDM	H77512
				HNBR	H168759
				FPM	H77511
				VMQ	
	2	Housing seal	SW43, SW44, SW47, SW48	EPDM	H77512
				HNBR	H168759
				FPM	H77511
				VMQ	
	3	Housing seal	SWE45, SWE46, SWE47, SWE48	EPDM	H77512
				HNBR	H168759
				FPM	H77511
				VMQ	
7	1	Clamp	SW41, SW42 SWE41, SWE42, SWE43, SWE44	1.4301	H126267
	2	Clamp	SW43, SW44, SW47, SW48	1.4301	H126267
	3	Clamp	SWE45, SWE46, SWE47, SWE48	1.4301	H126267
8	1	Shaft seal		Turcon MF6	H323082

Information contained in this document is subject to change without notice and does not represent a commitment on the part of SPX FLOW, Inc.. No part of this document may be reproduced or transmitted in any form or by any means, electronic or mechanical, including photocopying and recording, for any

Spare parts list:

Single Seat Valve SW41, SW42, SWE43, SWE44, SWE41, SWE42
Change Over Valve SW43, SW44, SW47, SW48, SWE45, SWE46, SWE47, SWE48
Device Category 3G for ATEX Zone 2
DN80

Date:	19.07.23			
Name:	Shreshth			
Approved by:	Peters			
Date:				
Name:				
Approved by:				

SPX FLOW

RN ATEX 054.805-2

Item	Quantity	Description		Material	Part no.
9	1	Seat seal		EPDM	H77442
				HNBR	H170176
				FPM	H77441
				VMQ	H77440
10	1	Bushing		PTFE + 25% carbon	H207154
11	1	Yoke		1.4404	H171386
12	4	Hex. screw M8x20	DIN EN 24017-A2-70	1.4301	H78776
13	1	Actuator	Ø165		H171380
14	1	Guide rod		1.4305	H171063
15	1	Centering nut		1.4301	H170196
16	1	Hex. Nut	DIN EN ISO 10511-M12-A2	A2-70	H79298
17	4	Hex. screw M8x16	DIN EN 24017-A2-70	A2-70	H78772
18	1	O-ring		NBR	H173930
19	1	Opereating cam		1.4523	H173087
20	1	Proximity switch holder housing SW4		VESTAMID	H173931
21	1	CU4-T-Adapter, CU4plus-T-Adapter		PA6.6 GF30	see page 27
22	1	CU4, CU4plus		PA6.6 GF30	see page 27

Item	Quantity	Description		Material	Part no.
		Pos. 12,13 und 17 available as complete seal kit only			
		If seat seal (pos.17) in VMQ - than housing seal (pos. 13) in HNBR			
	1	Seal kit	SW 41, 42, SWE 43, 44	EPDM	H175809
	1	Seal kit	SW 41, 42, SWE 43, 44	HNBR	H175815
	1	Seal kit	SW 41, 42, SWE 43, 44	FPM	H203384
	1	Seal kit	SW 41, 42, SWE 43, 44	VMQ	H310452
		Pos. 4, 6, 8, 9 and 10 available as complete seal kit only			
		If seat seal (pos.4) in VMQ - than housing seal (pos. 6) in HNBR			
	1	Seal kit	SWE 41, SWE42	EPDM	H175826
	1	Seal kit	SWE 41, SWE42	HNBR	H175832
	1	Seal kit	SWE 41, SWE42	FPM	H310464
	1	Seal kit	SWE 41, SWE42	VMQ	H310465
		Pos. 4, 6, 8, 9 and 10 available as complete seal kit only			
		If seat seal (pos.4) in VMQ - than housing seal (pos. 6) in HNBR			
	1	Seal kit	SW43, SW44, SW47, SW48	EPDM	H175842
	1	Seal kit	SW43, SW44, SW47, SW48	HNBR	H175848
	1	Seal kit	SW43, SW44, SW47, SW48	FPM	H203383
	1	Seal kit	SW43, SW44, SW47, SW48	VMQ	H310471
		Pos. 4, 6, 8, 9 and 10 available as complete seal kit only			
		If seat seal (pos.4) in VMQ - than housing seal (pos. 6) in HNBR			
	1	Seal kit	SWE45, SWE46, SWE47,SWE48	EPDM	H203757
	1	Seal kit	SWE45, SWE46, SWE47,SWE48	HNBR	H321851
	1	Seal kit	SWE45, SWE46, SWE47,SWE48	FPM	H327506
	1	Seal kit	SWE45, SWE46, SWE47,SWE48	VMQ	

Information contained in this document is subject to change without notice and does not represent a commitment on the part of SPX FLOW, Inc.. No part of this document may be reproduced or transmitted in any form or by any means, electronic or mechanical, including photocopying and recording, for any

Spare parts list:

Single Seat Valve SW41, SW42, SWE43, SWE44, SWE41, SWE42
Change Over Valve SW43, SW44, SW47, SW48, SWE45, SWE46, SWE47, SWE48
Device Category 3G for ATEX Zone 2
3"

Date:	19.07.23			
Name:	Shreshth			
Approved by:	Peters			
Date:				
Name:				
Approved by:				

SPX FLOW

RN ATEX 054.805-2

Item	Quantity	Description		Material	Part no.
1	1	Housing	SW41	1.4404	H168781
1	1	Housing	SW42	1.4404	H172438
1	1	Housing	SWE43	1.4404	H172808
1	1	Housing	SWE44	1.4404	H172814
1	1	Housing upper part	SWE41	1.4404	H168787
2	1	Housing lower part		1.4404	H172715
1	1	Housing upper part	SWE42	1.4404	H172480
2	1	Housing lower part		1.4404	H172715
1	1	Housing upper part	SW43	1.4404	H168787
2	1	Housing		1.4404	H168781
1	1	Housing upper part	SW44	1.4404	H172480
2	1	Housing		1.4404	H168781
1	1	Housing upper part	SW47	1.4404	H168787
2	1	Housing		1.4404	H172438
1	1	Housing upper part	SW48	1.4404	H168787
2	1	Housing		1.4404	H172438
1	1	Housing upper part	SWE45	1.4404	H168787
2	1	Housing upper part		1.4404	H168787
3	1	Housing lower part		1.4404	H172715
1	1	Housing upper part	SWE46	1.4404	H172480
2	1	Housing upper part		1.4404	H168787
3	1	Housing lower part		1.4404	H172715
1	1	Housing upper part	SWE47	1.4404	H168787
2	1	Housing upper part		1.4404	H172480
3	1	Housing lower part		1.4404	H172715
1	1	Housing upper part	SWE48	1.4404	H168787
2	1	Housing upper part		1.4404	H168787
3	1	Housing lower part		1.4404	H311369

Item	Quantity	Description		Material	Part no.
4	1	Seat seal	SW41, SW42 SWE41, SWE42, SWE43, SWE44	EPDM	H77561
				HNBR	H166679
				FPM	H77560
				VMQ	H77559
	2	Seat seal	SW43, SW44, SW47, SW48 SWE45, SWE46, SWE47, SWE48	EPDM	H77561
				HNBR	H166679
				FPM	H77560
				VMQ	H77559
5	1	Valve shaft	SW41, SW42 SWE41, SWE42, SWE43, SWE44	1.4404	H170339
	1	Valve shaft	SW43, SW44, SW47, SW48 SWE45, SWE46, SWE47, SWE48	1.4404	H170576
6	1	Housing seal	SW41, SW42 SWE41, SWE42, SWE43, SWE44	EPDM	H170669
				HNBR	H170656
				FPM	H170670
				VMQ	
	2	Housing seal	SW43, SW44, SW47, SW48	EPDM	H170669
				HNBR	H170656
				FPM	H170670
				VMQ	
	3	Housing seal	SWE45, SWE46, SWE47, SWE48	EPDM	H170669
				HNBR	H170656
				FPM	H170670
				VMQ	
7	1	Clamp	SW41, SW42 SWE41, SWE42, SWE43, SWE44	1.4301	H126267
	2	Clamp	SW43, SW44, SW47, SW48	1.4301	H126267
	3	Clamp	SWE45, SWE46, SWE47, SWE48	1.4301	H126267
8	1	Shaft seal		Turcon MF6	H323082

Information contained in this document is subject to change without notice and does not represent a commitment on the part of SPX FLOW, Inc.. No part of this document may be reproduced or transmitted in any form or by any means, electronic or mechanical, including photocopying and recording, for any

Spare parts list:

Single Seat Valve SW41, SW42, SWE43, SWE44, SWE41, SWE42
Change Over Valve SW43, SW44, SW47, SW48, SWE45, SWE46, SWE47, SWE48
Device Category 3G for ATEX Zone 2
3"

Date:	19.07.23			
Name:	Shreshth			
Approved by:	Peters			
Date:				
Name:				
Approved by:				

SPX FLOW

RN ATEX 054.805-2

Item	Quantity	Description		Material	Part no.
9	1	Seat seal		EPDM	H77442
				HNBR	H170176
				FPM	H77441
				VMQ	H77440
10	1	Bushing		PTFE + 25% carbon	H207154
11	1	Yoke		1.4404	H171389
12	4	Hex. screw M8x20	DIN EN 24017-A2-70	1.4301	H78776
13	1	Actuator	Ø165		H171380
14	1	Guide rod		1.4305	H171063
15	1	Centering nut		1.4301	H170196
16	1	Hex. Nut	DIN EN ISO 10511-M12-A2	A2-70	H79298
17	4	Hex. screw M8x16	DIN EN 24017-A2-70	A2-70	H78772
18	1	O-ring		NBR	H173930
19	1	Opereating cam		1.4523	H173087
20	1	Proximity switch holder housing SW4		VESTAMID	H173931
21	1	CU4-T-Adapter, CU4plus-T-Adapter		PA6.6 GF30	see page 27
22	1	CU4, CU4plus		PA6.6 GF30	see page 27

Item	Quantity	Description		Material	Part no.
		Pos. 12,13 und 17 available as complete seal kit only			
		If seat seal (pos.17) in VMQ - than housing seal (pos. 13) in HNBR			
	1	Seal kit	SW 41, 42, SWE 43, 44	EPDM	H175818
	1	Seal kit	SW 41, 42, SWE 43, 44	HNBR	H175820
	1	Seal kit	SW 41, 42, SWE 43, 44	FPM	H310453
	1	Seal kit	SW 41, 42, SWE 43, 44	VMQ	H201994
		Pos. 4, 6, 8, 9 and 10 available as complete seal kit only			
		If seat seal (pos.4) in VMQ - than housing seal (pos. 6) in HNBR			
	1	Seal kit	SWE 41, SWE42	EPDM	H175835
	1	Seal kit	SWE 41, SWE42	HNBR	H175837
	1	Seal kit	SWE 41, SWE42	FPM	H310462
	1	Seal kit	SWE 41, SWE42	VMQ	H310463
		Pos. 4, 6, 8, 9 and 10 available as complete seal kit only			
		If seat seal (pos.4) in VMQ - than housing seal (pos. 6) in HNBR			
	1	Seal kit	SW43, SW44, SW47, SW48	EPDM	H175851
	1	Seal kit	SW43, SW44, SW47, SW48	HNBR	H175853
	1	Seal kit	SW43, SW44, SW47, SW48	FPM	H310469
	1	Seal kit	SW43, SW44, SW47, SW48	VMQ	H310471
		Pos. 4, 6, 8, 9 and 10 available as complete seal kit only			
		If seat seal (pos.4) in VMQ - than housing seal (pos. 6) in HNBR			
	1	Seal kit	SWE45, SWE46, SWE47,SWE48	EPDM	H203761
	1	Seal kit	SWE45, SWE46, SWE47,SWE48	HNBR	H325407
	1	Seal kit	SWE45, SWE46, SWE47,SWE48	FPM	H325408
	1	Seal kit	SWE45, SWE46, SWE47,SWE48	VMQ	

Information contained in this document is subject to change without notice and does not represent a commitment on the part of SPX FLOW, Inc.. No part of this document may be reproduced or transmitted in any form or by any means, electronic or mechanical, including photocopying and recording, for any

Spare parts list:

Single Seat Valve SW41, SW42, SWE43, SWE44, SWE41, SWE42
Change Over Valve SW43, SW44, SW47, SW48, SWE45, SWE46, SWE47, SWE48
Device Category 3G for ATEX Zone 2
DN100

Date:	19.07.23				**SPX FLOW**
Name:	Shreshth				
Approved by:	Peters				
Date:					Page 23 of 27
Name:					**RN ATEX 054.805-2**
Approved by:					

Item	Quantity	Description		Material	Part no.
1	1	Housing	SW41	1.4404	H161864
1	1	Housing	SW42	1.4404	H172433
1	1	Housing	SWE43	1.4404	H169954
1	1	Housing	SWE44	1.4404	H173727
1	1	Housing upper part	SWE41	1.4404	H168660
2	1	Housing lower part		1.4404	H172690
1	1	Housing upper part	SWE42	1.4404	H172471
2	1	Housing lower part		1.4404	H172690
1	1	Housing upper part	SW43	1.4404	H168660
2	1	Housing		1.4404	H161864
1	1	Housing upper part	SW44	1.4404	H172471
2	1	Housing		1.4404	H161864
1	1	Housing upper part	SW47	1.4404	H168660
2	1	Housing		1.4404	H172433
1	1	Housing upper part	SW48	1.4404	H172471
2	1	Housing		1.4404	H172433
1	1	Housing upper part	SWE45	1.4404	H168660
2	1	Housing upper part		1.4404	H168660
3	1	Housing lower part		1.4404	H172690
1	1	Housing upper part	SWE46	1.4404	H172471
2	1	Housing upper part		1.4404	H168660
3	1	Housing lower part		1.4404	H172690
1	1	Housing upper part	SWE47	1.4404	H168660
2	1	Housing upper part		1.4404	H172471
3	1	Housing lower part		1.4404	H172690
1	1	Housing upper part	SWE48	1.4404	H168660
2	1	Housing upper part		1.4404	H168660
3	1	Housing lower part		1.4404	H311366

Item	Quantity	Description		Material	Part no.
4	1	Seat seal	SW41, SW42 SWE41, SWE42, SWE43, SWE44	EPDM	H77586
				HNBR	H166682
				FPM	H77785
				VMQ	H77584
	2	Seat seal	SW43, SW44, SW47, SW48 SWE45, SWE46, SWE47, SWE48	EPDM	H77586
				HNBR	H166682
				FPM	H77785
				VMQ	H77584
5	1	Valve shaft	SW41, SW42 SWE41, SWE42, SWE43, SWE44	1.4404	H170334
	1	Valve shaft	SW43, SW44, SW47, SW48 SWE45, SWE46, SWE47, SWE48	1.4404	H170571
6	1	Housing seal	SW41, SW42 SWE41, SWE42, SWE43, SWE44	EPDM	H170671
				HNBR	H170657
				FPM	H170672
				VMQ	
	2	Housing seal	SW43, SW44, SW47, SW48	EPDM	H170671
				HNBR	H170657
				FPM	H170672
				VMQ	
	3	Housing seal	SWE45, SWE46, SWE47, SWE48	EPDM	H170671
				HNBR	H170657
				FPM	H170672
				VMQ	
7	1	Clamp	SW41, SW42 SWE41, SWE42, SWE43, SWE44	1.4301	H126268
	2	Clamp	SW43, SW44, SW47, SW48	1.4301	H126268
	3	Clamp	SWE45, SWE46, SWE47, SWE48	1.4301	H126268
8	1	Shaft seal		Turcon MF6	H323082

Information contained in this document is subject to change without notice and does not represent a commitment on the part of SPX FLOW, Inc.. No part of this document may be reproduced or transmitted in any form or by any means, electronic or mechanical, including photocopying and recording, for any

Spare parts list:

Single Seat Valve SW41, SW42, SWE43, SWE44, SWE41, SWE42
Change Over Valve SW43, SW44, SW47, SW48, SWE45, SWE46, SWE47, SWE48
Device Category 3G for ATEX Zone 2
DN100

Date:	19.07.23			
Name:	Shreshth			
Approved by:	Peters			
Date:				
Name:				
Approved by:				

SPX FLOW

RN ATEX 054.805-2

Item	Quantity	Description		Material	Part no.
9	1	Seat seal		EPDM	H77442
				HNBR	H170176
				FPM	H77441
				VMQ	H77440
10	1	Bushing		PTFE + 25% carbon	H207154
11	1	Yoke		1.4404	H171387
12	4	Hex. screw M8x20	DIN EN 24017-A2-70	1.4301	H78776
13	1	Actuator	Ø165		H171380
14	1	Guide rod		1.4305	H171063
15	1	Centering nut		1.4301	H170196
16	1	Hex. Nut	DIN EN ISO 10511-M12-A2	A2-70	H79298
17	4	Hex. screw M8x16	DIN EN 24017-A2-70	A2-70	H78772
18	1	O-ring		NBR	H173930
19	1	Opereating cam		1.4523	H173087
20	1	Proximity switch holder housing SW4		VESTAMID	H173931
21	1	CU4-T-Adapter, CU4plus-T-Adapter		PA6.6 GF30	see page 27
22	1	CU4, CU4plus		PA6.6 GF30	see page 27

Item	Quantity	Description		Material	Part no.
		Pos. 12,13 und 17 available as complete seal kit only			
		If seat seal (pos.17) in VMQ - than housing seal (pos. 13) in HNBR			
	1	Seal kit	SW 41, 42, SWE 43, 44	EPDM	H175810
	1	Seal kit	SW 41, 42, SWE 43, 44	HNBR	H175816
	1	Seal kit	SW 41, 42, SWE 43, 44	FPM	H204908
	1	Seal kit	SW 41, 42, SWE 43, 44	VMQ	H310454
		Pos. 4, 6, 8, 9 and 10 available as complete seal kit only			
		If seat seal (pos.4) in VMQ - than housing seal (pos. 6) in HNBR			
	1	Seal kit	SWE 41, SWE42	EPDM	H175827
	1	Seal kit	SWE 41, SWE42	HNBR	H175833
	1	Seal kit	SWE 41, SWE42	FPM	H310466
	1	Seal kit	SWE 41, SWE42	VMQ	H310467
		Pos. 4, 6, 8, 9 and 10 available as complete seal kit only			
		If seat seal (pos.4) in VMQ - than housing seal (pos. 6) in HNBR			
	1	Seal kit	SW43, SW44, SW47, SW48	EPDM	H175843
	1	Seal kit	SW43, SW44, SW47, SW48	HNBR	H175849
	1	Seal kit	SW43, SW44, SW47, SW48	FPM	H207422
	1	Seal kit	SW43, SW44, SW47, SW48	VMQ	H310472
		Pos. 4, 6, 8, 9 and 10 available as complete seal kit only			
		If seat seal (pos.4) in VMQ - than housing seal (pos. 6) in HNBR			
	1	Seal kit	SWE45, SWE46, SWE47,SWE48	EPDM	H203758
	1	Seal kit	SWE45, SWE46, SWE47,SWE48	HNBR	H325242
	1	Seal kit	SWE45, SWE46, SWE47,SWE48	FPM	H327507
	1	Seal kit	SWE45, SWE46, SWE47,SWE48	VMQ	

Information contained in this document is subject to change without notice and does not represent a commitment on the part of SPX FLOW, Inc.. No part of this document may be reproduced or transmitted in any form or by any means, electronic or mechanical, including photocopying and recording, for any

Spare parts list:

Single Seat Valve SW41, SW42, SWE43, SWE44, SWE41, SWE42
Change Over Valve SW43, SW44, SW47, SW48, SWE45, SWE46, SWE47, SWE48
Device Category 3G for ATEX Zone 2
4"

Date:	19.07.23			
Name:	Shreshth			
Approved by:	Peters			
Date:				
Name:				
Approved by:				

SPX FLOW

RN ATEX 054.805-2

Item	Quantity	Description		Material	Part no.
1	1	Housing	SW41	1.4404	H168804
1	1	Housing	SW42	1.4404	H172439
1	1	Housing	SWE43	1.4404	H172809
1	1	Housing	SWE44	1.4404	H172815
1	1	Housing upper part	SWE41	1.4404	H168809
2	1	Housing lower part		1.4404	H172716
1	1	Housing upper part	SWE42	1.4404	H172481
2	1	Housing lower part		1.4404	H172716
1	1	Housing upper part	SW43	1.4404	H168809
2	1	Housing		1.4404	H168804
1	1	Housing upper part	SW44	1.4404	H172481
2	1	Housing		1.4404	H168804
1	1	Housing upper part	SW47	1.4404	H168809
2	1	Housing		1.4404	H172439
1	1	Housing upper part	SW48	1.4404	H172481
2	1	Housing		1.4404	H172439
1	1	Housing upper part	SWE45	1.4404	H168809
2	1	Housing upper part		1.4404	H168809
3	1	Housing lower part		1.4404	H172716
1	1	Housing upper part	SWE46	1.4404	H172481
2	1	Housing upper part		1.4404	H168809
3	1	Housing lower part		1.4404	H172716
1	1	Housing upper part	SWE47	1.4404	H168809
2	1	Housing upper part		1.4404	H172481
3	1	Housing lower part		1.4404	H172716
1	1	Housing upper part	SWE48	1.4404	H168809
2	1	Housing upper part		1.4404	H168809
3	1	Housing lower part		1.4404	H311370

Item	Quantity	Description		Material	Part no.
4	1	Seat seal	SW41, SW42 SWE41, SWE42, SWE43, SWE44	EPDM	H77586
				HNBR	H166682
				FPM	H77785
				VMQ	H77584
	2	Seat seal	SW43, SW44, SW47, SW48 SWE45, SWE46, SWE47, SWE48	EPDM	H77586
				HNBR	H166682
				FPM	H77785
				VMQ	H77584
5	1	Valve shaft	SW41, SW42 SWE41, SWE42, SWE43, SWE44	1.4404	H170340
	1	Valve shaft	SW43, SW44, SW47, SW48 SWE45, SWE46, SWE47, SWE48	1.4404	H170577
6	1	Housing seal	SW41, SW42 SWE41, SWE42, SWE43, SWE44	EPDM	H170671
				HNBR	H170657
				FPM	H170672
				VMQ	
	2	Housing seal	SW43, SW44, SW47, SW48	EPDM	H170671
				HNBR	H170657
				FPM	H170672
				VMQ	
	3	Housing seal	SWE45, SWE46, SWE47, SWE48	EPDM	H170671
				HNBR	H170657
				FPM	H170672
				VMQ	
7	1	Clamp	SW41, SW42 SWE41, SWE42, SWE43, SWE44	1.4301	H126268
	2	Clamp	SW43, SW44, SW47, SW48	1.4301	H126268
	3	Clamp	SWE45, SWE46, SWE47, SWE48	1.4301	H126268
8	1	Shaft seal		Turcon MF6	H323082

Information contained in this document is subject to change without notice and does not represent a commitment on the part of SPX FLOW, Inc.. No part of this document may be reproduced or transmitted in any form or by any means, electronic or mechanical, including photocopying and recording, for any

Spare parts list:

Single Seat Valve SW41, SW42, SWE43, SWE44, SWE41, SWE42
Change Over Valve SW43, SW44, SW47, SW48, SWE45, SWE46, SWE47, SWE48
Device Category 3G for ATEX Zone 2
4"

Date:	19.07.23			
Name:	Shreshth			
Approved by:	Peters			
Date:				
Name:				
Approved by:				

SPX FLOW

RN ATEX 054.805-2

Item	Quantity	Description		Material	Part no.
9	1	Seat seal		EPDM	H77442
				HNBR	H170176
				FPM	H77441
				VMQ	H77440
10	1	Bushing		PTFE + 25% carbon	H207154
11	1	Yoke		1.4404	H171387
12	4	Hex. screw M8x20	DIN EN 24017-A2-70	1.4301	H78776
13	1	Actuator	Ø165		H171380
14	1	Guide rod		1.4305	H171063
15	1	Centering nut		1.4301	H170196
16	1	Hex. Nut	DIN EN ISO 10511-M12-A2	A2-70	H79298
17	4	Hex. screw M8x16	DIN EN 24017-A2-70	A2-70	H78772
18	1	O-ring		NBR	H173930
19	1	Opereating cam		1.4523	H173087
20	1	Proximity switch holder housing SW4		VESTAMID	H173931
21	1	CU4-T-Adapter, CU4plus-T-Adapter		PA6.6 GF30	see page 27
22	1	CU4, CU4plus		PA6.6 GF30	see page 27

Item	Quantity	Description		Material	Part no.
		Pos. 12,13 und 17 available as complete seal kit only			
		If seat seal (pos.17) in VMQ - than housing seal (pos. 13) in HNBR			
	1	Seal kit	SW 41, 42, SWE 43, 44	EPDM	H175810
	1	Seal kit	SW 41, 42, SWE 43, 44	HNBR	H175816
	1	Seal kit	SW 41, 42, SWE 43, 44	FPM	H204908
	1	Seal kit	SW 41, 42, SWE 43, 44	VMQ	H310454
		Pos. 4, 6, 8, 9 and 10 available as complete seal kit only			
		If seat seal (pos.4) in VMQ - than housing seal (pos. 6) in HNBR			
	1	Seal kit	SWE 41, SWE42	EPDM	H175827
	1	Seal kit	SWE 41, SWE42	HNBR	H175833
	1	Seal kit	SWE 41, SWE42	FPM	H310466
	1	Seal kit	SWE 41, SWE42	VMQ	H310467
		Pos. 4, 6, 8, 9 and 10 available as complete seal kit only			
		If seat seal (pos.4) in VMQ - than housing seal (pos. 6) in HNBR			
	1	Seal kit	SW43, SW44, SW47, SW48	EPDM	H175843
	1	Seal kit	SW43, SW44, SW47, SW48	HNBR	H175849
	1	Seal kit	SW43, SW44, SW47, SW48	FPM	H207422
	1	Seal kit	SW43, SW44, SW47, SW48	VMQ	H310472
		Pos. 4, 6, 8, 9 and 10 available as complete seal kit only			
		If seat seal (pos.4) in VMQ - than housing seal (pos. 6) in HNBR			
	1	Seal kit	SWE45, SWE46, SWE47,SWE48	EPDM	H203758
	1	Seal kit	SWE45, SWE46, SWE47,SWE48	HNBR	H325242
	1	Seal kit	SWE45, SWE46, SWE47,SWE48	FPM	H327507
	1	Seal kit	SWE45, SWE46, SWE47,SWE48	VMQ	

Information contained in this document is subject to change without notice and does not represent a commitment on the part of SPX FLOW, Inc.. No part of this document may be reproduced or transmitted in any form or by any means, electronic or mechanical, including photocopying and recording, for any

Spare parts list:

Single Seat Valve SW41, SW42, SWE43, SWE44, SWE41, SWE42
Change Over Valve SW43, SW44, SW47, SW48, SWE45, SWE46, SWE47, SWE48
Device Category 3G for ATEX Zone 2

Date:	19.07.23				**SPX FLOW**
Name:	Shreshth				
Approved by:	Peters				
Date:					Page 27 of 27
Name:					**RN ATEX 054.805-2**
Approved by:					

Item	Quantity	Description	Air connections	Material	Part no.
21		**CU4 S adapter Zone 2**			
	1	CU4-S-adapter cpl.	/	PA6.6 GF30	H320474
22		**CU4 S Control Units Zone 2 (Hall Sernsors)**			
	1	CU41 S AS-I ATEX 3 G	6mm	PA6.6 GF30	H345511
	1	CU41 S AS-I M12 ATEX 3 G	6mm	PA6.6 GF30	H345512
	1	CU41 S DC ATEX 3 G	6mm	PA6.6 GF30	H345513
	1	CU41 S DC M12 ATEX 3 G	6mm	PA6.6 GF30	H345514

Item	Quantity	Description	Air connections	Material	Part no.
21		**CU4plus S adapter Zone 2**			
	1	CU4plus-S-adapter cpl.	/	PA6.6 GF30	H333143
22		**CU4plus S Control Units Zone 2 (Linear Sensors)**			
	1	CU41PLUS S AS-I ATEX 3 G	6mm	PA6.6 GF30	H345718
	1	CU41PLUS S AS-I M12 ATEX 3 G	6mm	PA6.6 GF30	H345719
	1	CU41PLUS S DC ATEX 3 G	6mm	PA6.6 GF30	H345720
	1	CU41PLUS S DC M12 ATEX 3 G	6mm	PA6.6 GF30	H345721
	1	CU41PLUS S M12 IO-LINK ATEX 3	6mm	PA6.6 GF30	H347994

Information contained in this document is subject to change without notice and does not represent a commitment on the part of SPX FLOW, Inc.. No part of this document may be reproduced or transmitted in any form or by any means, electronic or mechanical, including photocopying and recording, for any

Spare parts list:

Actuator SW4

Date:	11/08	12/09	27.01.15	10.7.17
Name:	Peters	Peters	Trytko	Keil
Approved by:				
Date:	04/23			
Name:	Shreshth			
Approved by:	Peters			

SPX FLOW

RN 01.054.86

Item	Quantity	Description	Ø 74	Ø 110	Ø 165
1	1	Actuator cpl. Spring/air satin finish	H171378	H171379	H171380
		Actuator cpl. Spring/air 3A bright	H208693	H173538	H173524
		Actuator cpl. air/air satin finish	H209592	H209203	H208733
		Actuator cpl. air/air 3A bright	H208690	H208772	H208773
2	2	Seal screw	H170200		
3	2	V-seal	H171060		
4	2	O-ring	H171059		
5	1	Venting Plug G-1/8"	H16218		
6	1	W-Union G-1/8" / 6Ømm slewable	H208825		
		W-Union G-1/8" / 1/4" OD 6Ømm slewable	H312732		

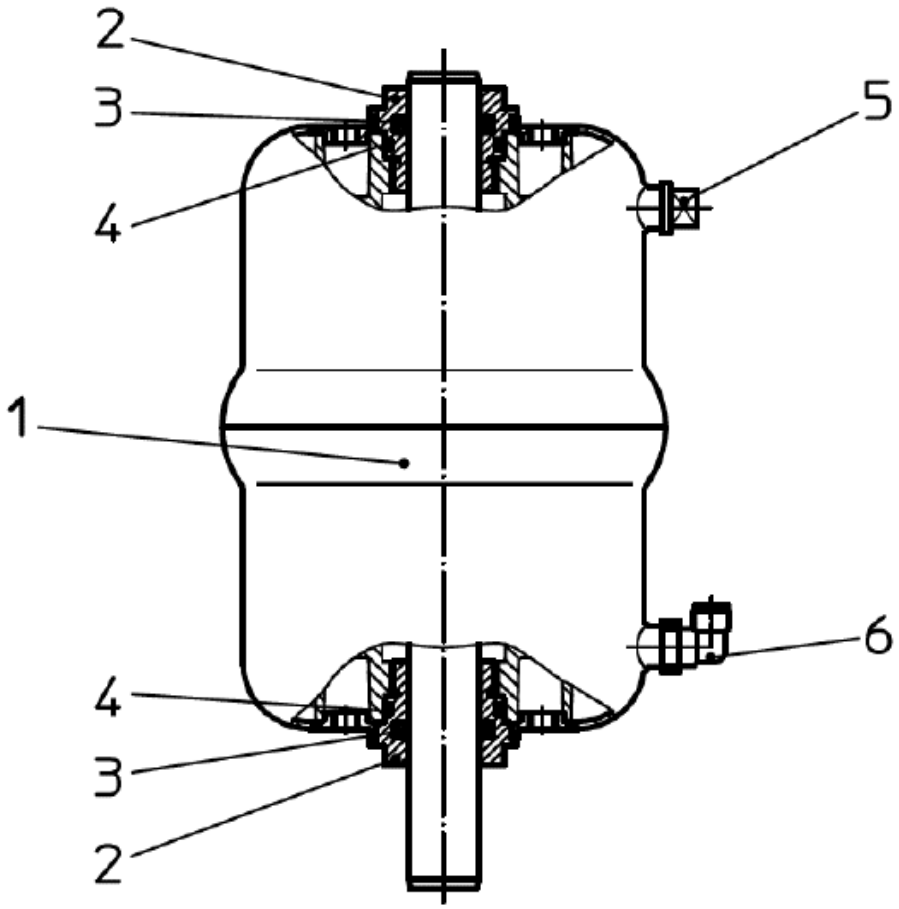

APV SW4
DN25-100, 1”-4”

SINGLE SEAT AND CHANGE-OVER VALVE

FOR SPECIFIC ATEX-APPLICATIONS

SPX FLOW

Design Center

Gottlieb-Daimler-Straße 13

D-59439 Holzwickede, Germany

P: (+49) (0) 2301-9186-0

F: (+49) (0) 2301-9186-300

SPX FLOW

Production

Rolbieskiego 2

PL- Bydgoszcz 85-862, Poland

P: (+48) 52 566 76 00

F: (+48) 52 525 99 09

SPX FLOW reserves the right to incorporate the latest design and material changes without notice or obligation.

Design features, materials of construction and dimensional data, as described in this manual, are provided for your information only should not be relied upon unless confirmed in writing. Please contact your local sales representative for product availability in your region. For more information visit www.spxflow.com.

Scan for SW4 Valve Maintenance Video

ISSUED 07/2023 - Original Manual

COPYRIGHT ©2023 SPX FLOW, Inc.